Patents

629

No. 1630629

THE UNITED STATES OF AMERICA

TO ALL TO WHOM THESE PRESENTS SHALL COME:

Whereas JOHN P. NIKONOW,

of

New York, N. Y.,

PRESENTED TO THE **Commissioner of Patents** A PETITION PRAYING FOR THE GRANT OF LETTERS PATENT FOR AN ALLEGED NEW AND USEFUL IMPROVEMENT IN

ELECTRICALLY-OPERATED IGNITION CONTROLS,

A DESCRIPTION OF WHICH INVENTION IS CONTAINED IN THE SPECIFICATION OF WHICH A COPY IS HEREUNTO ANNEXED AND MADE A PART HEREOF, AND COMPLIED WITH THE VARIOUS REQUIREMENTS OF LAW IN SUCH CASES MADE AND PROVIDED, AND

Whereas UPON DUE EXAMINATION MADE THE SAID CLAIMANT is ADJUDGED TO BE JUSTLY ENTITLED TO A PATENT UNDER THE LAW.

NOW THEREFORE THESE **Letters Patent** ARE TO GRANT UNTO THE SAID

John P. Nikonow, his heirs OR ASSIGNS

FOR THE TERM OF SEVENTEEN YEARS FROM THE DATE OF THIS GRANT

THE EXCLUSIVE RIGHT TO MAKE, USE AND VEND THE SAID INVENTION THROUGHOUT THE UNITED STATES AND THE TERRITORIES THEREOF.

In testimony whereof I have hereunto set my hand and caused the seal of the Patent Office to be affixed at the City of Washington this thirty-first day of May, in the year of our Lord one thousand nine hundred and twenty-seven, and of the Independence of the United States of America the one hundred and fifty-first.

Attest:

G. R. Fricke
Law Examiner.

Thomas E. Robertson
Commissioner of Patents.

May 31, 1927. J. P. NIKONOW 1,630,629

ELECTRICALLY OPERATED IGNITION CONTROL

Filed Sept. 14, 1926

Fig. 1

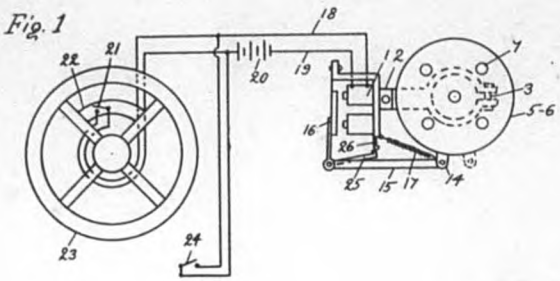

Fig. 2

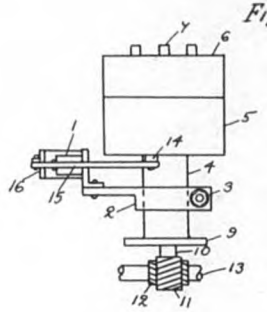

John P. Nikonow

INVENTOR

Patented May 31, 1927. 1,630,629

UNITED STATES PATENT OFFICE.

JOHN P. NIKONOW, OF NEW YORK, N. Y.

ELECTRICALLY-OPERATED IGNITION CONTROL.

Application filed September 14, 1926. Serial No. 135,475.

My invention relates to electrically operated ignition control for automobiles and has for its object to provide an electromagnetic device for retarding the spark for automobile engines. I further provide means to operate this electromagnetic device by a switch mounted on the steering wheel within easy reach of the driver.

Usually the ignition device (the interrupter) is mounted so that it can be rotated through an arc of a circle in order to adjust the time of the spark, that is to retard or to advance it. For this purpose usually a hand lever is provided on the steering post, connected with the interrupter (or ignition head) by means of a complicated system of rods, links and universal joints.

With my construction all these mechanical connections become unnecessary. I provide a spring which keeps the ignition head fully advanced, and only when it is desired to retard the spark, it is necessary to press the button on the steering post.

My method gives only one step in retarding the spark, but it is sufficient for all practical purposes, considering that all modern ignition devices have automatic spark advance within certain narrow limits.

I also provide an additional switch or contact button which can be operated together with the starter switch in order to retard the spark when starting the motor.

My invention is more fully described in the accompanying specification and drawing in which—

Fig. 1 is a plan view of an ignition device with my electromagnetic device, also a steering wheel with a control switch and connecting circuit, and Fig. 2 is an elevation of an ignition device with my magnet.

My device consists of a magnet 1 attached to a bracket 2 clamped by means of a bolt 3 to a tubular standard 4 of an ignition head or device 5 of an ordinary construction. This ignition head has an interrupter in its lower portion and distributor above (the inner construction of these parts is not shown). The distributor 6 has contact or terminal buttons 7 for leads to spark plugs (not shown).

The ignition head is rotatively mounted on a standard 8 with a flange 9 for attaching to an automobile engine (not shown). An operating shaft 10 is journaled inside of the standard 8 and has a gear 11 in mesh with a gear 12 on a cam shaft 13. A lug 14 on the ignition head is pivotally connected with a link 15 which in turn is pivotally connected with an armature 16 of a magnet 1. A spring 17 tends to keep the ignition head turned in a direction opposite to the action of the spring. The rotation is selected so as to keep the ignition fully advanced under action of the spring 17. The wires 18 and 19 connect the magnet 1 with a battery 20 and a switch or contact button 21 mounted on a segment 22 on a steering wheel 23. The wires 18 and 19 form a loop around the steering post so as to permit the turning of the wheel 23.

An additional switch 24 may be provided together with a starting switch (not shown) and adapted to be operated by the driver's foot in order to retard the spark when the engine is being started. In emergency, when the battery is very weak and it is necessary to crank by hand, in order to save the battery, the spark may be temporarily retarded by means of a hook 25 pivoted on the armature 16 and adapted to engage a stationary hook 26. This can be done by hand and the spark may be left retarded until the motor has been started, then the hooks 25 and 26 are manually disengaged.

The advantages of my invention are that it eliminates the complicated and troublesome mechanical connections from the steering wheel to the ignition unit and adds to the convenience of operating the spark control when it is necessary or desired.

I claim as my invention:

In an electrically operated ignition control, the combination with an ignition unit of a magnet adapted to turn said unit to the position for retarding the spark, means to operate said magnet, means to support said magnet, means to keep said unit in a position for advanced spark when said magnet is not operated, and means to manually lock said unit in a retarded position.

Signed at New York, in the county of New York and State of New York.

JOHN P. NIKONOW.

966.

No. 1674966

THE UNITED STATES OF AMERICA

TO ALL TO WHOM THESE PRESENTS SHALL COME:

Whereas CARL G. FISHER,

of

Port Washington, New York,

PRESENTED TO THE **Commissioner of Patents** A PETITION PRAYING FOR THE GRANT OF LETTERS PATENT FOR AN ALLEGED NEW AND USEFUL IMPROVEMENT IN

ELECTRIC SWITCH ATTACHMENTS,

A DESCRIPTION OF WHICH INVENTION IS CONTAINED IN THE SPECIFICATION OF WHICH A COPY IS HEREUNTO ANNEXED AND MADE A PART HEREOF, AND COMPLIED WITH THE VARIOUS REQUIREMENTS OF LAW IN SUCH CASES MADE AND PROVIDED, AND

Whereas UPON DUE EXAMINATION MADE THE SAID CLAIMANT is ADJUDGED TO BE JUSTLY ENTITLED TO A PATENT UNDER THE LAW.

NOW THEREFORE THESE **Letters Patent** ARE TO GRANT UNTO THE SAID

Carl G. Fisher, his heirs OR ASSIGNS

FOR THE TERM OF SEVENTEEN YEARS FROM THE DATE OF THIS GRANT

THE EXCLUSIVE RIGHT TO MAKE, USE AND VEND THE SAID INVENTION THROUGHOUT THE UNITED STATES AND THE TERRITORIES THEREOF.

In testimony whereof I have hereunto set my hand and caused the seal of the Patent Office to be affixed at the City of Washington this twenty-sixth *day of* June, *in the year of our Lord one thousand nine hundred and* twenty-eight, *and of the Independence of the United States of America the one hundred and* fifty-second.

Attest:

G. P. Fuller
Law Examiner.

Thomas E. Robertson
Commissioner of Patents.

June 26, 1928. 1,674,966

C. G. FISHER

ELECTRIC SWITCH ATTACHMENT

Filed Sept. 30, 1924

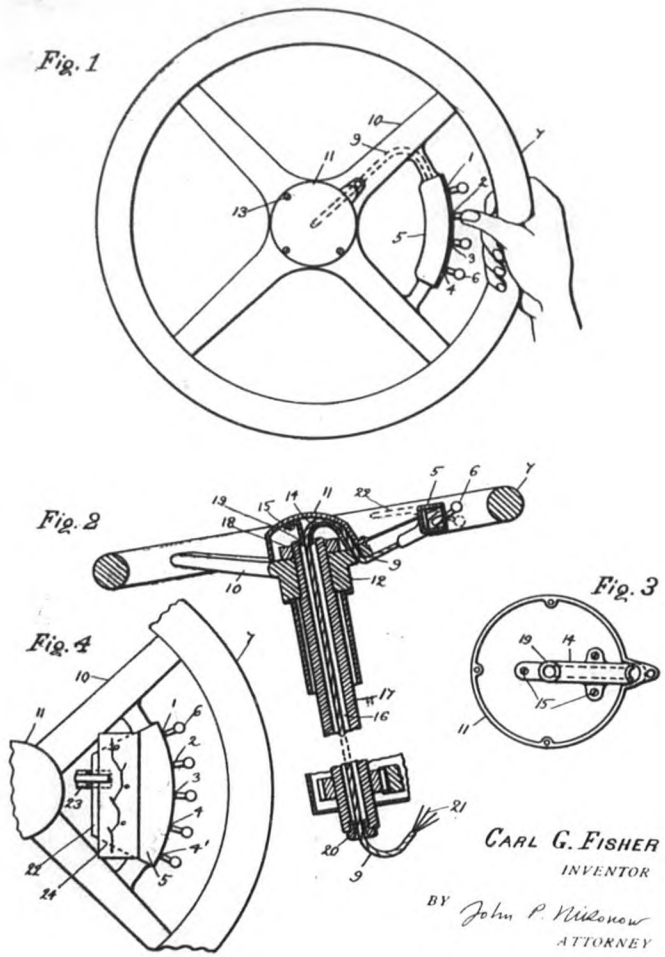

CARL G. FISHER
INVENTOR

BY John P. Nikonow
ATTORNEY

Patented June 26, 1928. 1,674,966

UNITED STATES PATENT OFFICE.

CARL G. FISHER, OF PORT WASHINGTON, NEW YORK.

ELECTRIC SWITCH ATTACHMENT.

Application filed September 30, 1924. Serial No. 740,778.

My invention relates to electric switch attachments and has a particular reference to switches controlling electric lights, ignition apparatus etc. on vehicles, such as automobiles and the like.

The object of my invention is to provide an electric switch mechanism mounted directly on the steering wheel of a vehicle within easy reach of the driver's fingers, so that he could operate these switches without losing his grip of the wheel.

I am aware that switches have been invented for mounting on top of the steering column, but such switches do not move with the steering wheel, and in order to operate them the driver must remove one hand from the wheel or to release his grip; while with my arrangement the driver can use both his hands for steering at all times, simply stretching out his thumb to operate any one of the switches wanted,—for instance, for dimming the headlights when passing another motorist, or pressing the electric horn button.

In order to maintain an uninterrupted electric connection between my switches and the rest of the electric equipment I provide an arrangement whereby the leads from the switches are brought through the hollow central portion of the steering column and allowing the straight portion of the cable to be twisted one way or the other during operation of the steering mechanism, this twisting being usually confined to narrow limits of about one turn either way. This arrangement is suitable for automobiles in which the control of the spark advance and of the throttle is placed outside of the steering column.

My invention is more fully described in the accompanying specification and drawing in which—

Fig. 1 is a plan view of a steering wheel with my switch, Fig. 2 is a sectional elevation of same, Fig. 3 is an inside view of the cable housing, and Fig. 4 is a plan view showing also an attachment for the road maps on the switch housing.

My switch mechanism consists of a plurality of individual switches 1, 2, 3 and 4, mounted in a switch housing 5 with the switch handles 6 extending outside. The housing is made in the form of an elongated box with its sides substantially concentric with the rim 7 of the steering wheel and attached to its spokes (or made integral with them).

The housing is placed at a convenient distance from the rim 7 so as not to interfere with the driver's hand. The switches may be of any construction, and switches of a "toggle" type are shown in Figs. 1 and 2 with their handles 6 extending radially so as to be within easy reach for the driver's thumb, while he firmly holds the wheel, as shown in Fig. 1.

The switches may be arranged so that with the handles in a raised position the circuits are open, and with the handles down,—closed, or vice versa. The down position of the handle is indicated in Fig. 2 with dotted lines.

One of the switches may be used to operate the electric horn circuit in which case it may be made with a retrieving spring which tends to hold it in an open position, the circuit being closed only while the driver's thumb is pressing on the handle.

One side of each switch may be grounded, according to usual practice on automobiles on which one side of the battery is grounded on the chassis frame.

One of the switches may be used, for instance, to operate the headlights, the other for dimmed or side lights and for the tail light, one for the ignition circuit etc.

The leads from the switches are twisted in a cable 9 and are brought under one of the spokes 10 of the wheel under a cable housing 11 attached to the wheel hub 12 with screws 13.

A guide bracket 14 is attached to the inside of the housing 11 with screws 15. This bracket forms a substantially semicircular guide in the housing for the cable 9 so as to bring the cable into a hollow central portion 16 of a steering column 17 to the upper end of which the steering wheel is attached with a nut 18. The guide bracket 14 is provided with a round tubular extension 19 partly fitting inside of the tubular central aperture 16.

The lower end of the cable is passed through a bushing 20 with rounded edges so as to prevent any chafing of the lower extension of the cable 9. The individual leads 21 of the cable are brought further to be connected with leads from different electrical apparatus controlled by the switches 1, 2, 3 and 4.

The straight portion of the cable inside of the steering post is wound loosely so that it can be twisted one way or the other to the extent required by the turning of the steering wheel. On ordinary automobiles it takes about one turn of the wheel either way from its middle position (with both wheels pointing straight ahead), and it is easy to provide a cable sufficiently flexible for this purpose.

This arrangement, of course, is especially practical with such steering wheels which do not have any control levers for spark and throttle, when automatic or foot operated devices are used, or when the control is placed in the instrument board.

The switch housing 5 may have an extension plate 22 with a spring clamp 23 for road maps, schedules, etc. (indicated with a numeral 24 in Fig. 4). Or the map supporting plate may be formed on some other part of my mechanism, for instance, on top of the cable housing 11.

Important advantages of my switch mounting is that the switches can be easily operated by the driver's thumb without releasing his grip of the wheel. This is very important from the safety point of view, the driver retaining full control of the wheel with both hands while dimming his headlights in passing another motorist or when using his electric horn to warn people and other vehicles on the road.

I claim as my invention:

1. In an electric switch attachment, the combination with a flexible insulated cable of a guiding member for said cable, a cap supporting said guiding member and attached to the upper central portion of a steering wheel, a switch on said steering wheel, said cable extending from said switch under said cap and through said guiding member in the hollow central passage in a post of said steering wheel, the lower portion of said guiding member extending into said hollow central passage and means to guide the lower end of said cable in said post.

2. In an electric switch attachment, the combination with a flexible insulated cable of a guiding member for said cable, a cap supporting said member and attached to the upper central portion of a steering wheel, and a switch on said steering wheel, said cable extending from said switch under said cap and extending further with the lower portion of said guiding member into the tubular central aperture in a post of said steering wheel.

3. In an electric switch attachment, the combination with a flexible insulated cable of a guiding member for the upper portion of said cable, means to support said guiding member on a steering wheel, a switch on said steering wheel, said cable extending from said switch through said guiding member into the tubular central aperture in a post of said steering wheel, the lower portion of said guiding member extending into said tubular aperture.

Signed at Port Washington, in the county of Nassau and State of New York, this 22 day of Sept., A. D. 1924.

CARL G. FISHER.

Patented June 26, 1928. 1,674,966

UNITED STATES PATENT OFFICE.

CARL G. FISHER, OF PORT WASHINGTON, NEW YORK.

ELECTRIC SWITCH ATTACHMENT.

Application filed September 30, 1924. Serial No. 740,778.

My invention relates to electric switch attachments and has a particular reference to switches controlling electric lights, ignition apparatus etc. on vehicles, such as automobiles and the like.

The object of my invention is to provide an electric switch mechanism mounted directly on the steering wheel of a vehicle within easy reach of the driver's fingers, so that he could operate these switches without losing his grip of the wheel.

I am aware that switches have been invented for mounting on top of the steering column, but such switches do not move with the steering wheel, and in order to operate them the driver must remove one hand from the wheel or to release his grip; while with my arrangement the driver can use both his hands for steering at all times, simply stretching out his thumb to operate any one of the switches wanted,—for instance, for dimming the headlights when passing another motorist, or pressing the electric horn button.

In order to maintain an uninterrupted electric connection between my switches and the rest of the electric equipment I provide an arrangement whereby the leads from the switches are brought through the hollow central portion of the steering column and allowing the straight portion of the cable to be twisted one way or the other during operation of the steering mechanism, this twisting being usually confined to narrow limits of about one turn either way. This arrangement is suitable for automobiles in which the control of the spark advance and of the throttle is placed outside of the steering column.

My invention is more fully described in the accompanying specification and drawing in which—

Fig. 1 is a plan view of a steering wheel with my switch, Fig. 2 is a sectional elevation of same, Fig. 3 is an inside view of the cable housing, and Fig. 4 is a plan view showing also an attachment for the road maps on the switch housing.

My switch mechanism consists of a plurality of individual switches 1, 2, 3 and 4, mounted in a switch housing 5 with the switch handles 6 extending outside. The housing is made in the form of an elongated box with its sides substantially concentric with the rim 7 of the steering wheel and attached to its spokes (or made integral with them).

The housing is placed at a convenient distance from the rim 7 so as not to interfere with the driver's hand. The switches may be of any construction, and switches of a "toggle" type are shown in Figs. 1 and 2 with their handles 6 extending radially so as to be within easy reach for the driver's thumb, while he firmly holds the wheel, as shown in Fig. 1.

The switches may be arranged so that with the handles in a raised position the circuits are open, and with the handles down,—closed, or vice versa. The down position of the handle is indicated in Fig. 2 with dotted lines.

One of the switches may be used to operate the electric horn circuit in which case it may be made with a retrieving spring which tends to hold it in an open position, the circuit being closed only while the driver's thumb is pressing on the handle.

One side of each switch may be grounded, according to usual practice on automobiles on which one side of the battery is grounded on the chassis frame.

One of the switches may be used, for instance, to operate the headlights, the other for dimmed or side lights and for the tail light, one for the ignition circuit etc.

The leads from the switches are twisted in a cable 9 and are brought under one of the spokes 10 of the wheel under a cable housing 11 attached to the wheel hub 12 with screws 13.

A guide bracket 14 is attached to the inside of the housing 11 with screws 15. This bracket forms a substantially semicircular guide in the housing for the cable 9 so as to bring the cable into a hollow central portion 16 of a steering column 17 to the upper end of which the steering wheel is attached with a nut 18. The guide bracket 14 is provided with a round tubular extension 19 partly fitting inside of the tubular central aperture 16.

The lower end of the cable is passed through a bushing 20 with rounded edges so as to prevent any chafing of the lower extension of the cable 9. The individual leads 21 of the cable are brought further to be connected with leads from different electrical apparatus controlled by the switches 1, 2, 3 and 4.

The straight portion of the cable inside of the steering post is wound loosely so that it can be twisted one way or the other to the extent required by the turning of the steering wheel. On ordinary automobiles it takes about one turn of the wheel either way from its middle position (with both wheels pointing straight ahead), and it is easy to provide a cable sufficiently flexible for this purpose.

This arrangement, of course, is especially practical with such steering wheels which do not have any control levers for spark and throttle, when automatic or foot operated devices are used, or when the control is placed in the instrument board.

The switch housing 5 may have an extension plate 22 with a spring clamp 23 for road maps, schedules, etc. (indicated with a numeral 24 in Fig. 4). Or the map supporting plate may be formed on some other part of my mechanism, for instance, on top of the cable housing 11.

Important advantages of my switch mounting is that the switches can be easily operated by the driver's thumb without releasing his grip of the wheel. This is very important from the safety point of view, the driver retaining full control of the wheel with both hands while dimming his headlights in passing another motorist or when using his electric horn to warn people and other vehicles on the road.

I claim as my invention:

1. In an electric switch attachment, the combination with a flexible insulated cable of a guiding member for said cable, a cap supporting said guiding member and attached to the upper central portion of a steering wheel, a switch on said steering wheel, said cable extending from said switch under said cap and through said guiding member in the hollow central passage in a post of said steering wheel, the lower portion of said guiding member extending into said hollow central passage and means to guide the lower end of said cable in said post.

2. In an electric switch attachment, the combination with a flexible insulated cable of a guiding member for said cable, a cap supporting said member and attached to the upper central portion of a steering wheel, and a switch on said steering wheel, said cable extending from said switch under said cap and extending further with the lower portion of said guiding member into the tubular central aperture in a post of said steering wheel.

3. In an electric switch attachment, the combination with a flexible insulated cable of a guiding member for the upper portion of said cable, means to support said guiding member on a steering wheel, a switch on said steering wheel, said cable extending from said switch through said guiding member into the tubular central aperture in a post of said steering wheel, the lower portion of said guiding member extending into said tubular aperture.

Signed at Port Washington, in the county of Nassau and State of New York, this 22 day of Sept., A. D. 1924.

CARL G. FISHER.

June 26, 1928. 1,674,966

C. G. FISHER

ELECTRIC SWITCH ATTACHMENT

Filed Sept. 30, 1924

Fig. 1

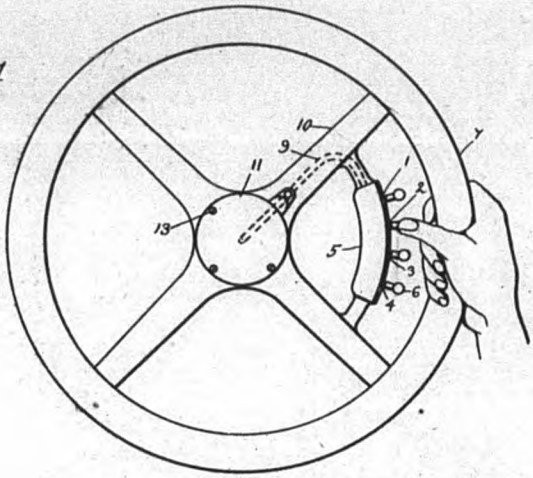

Fig. 2

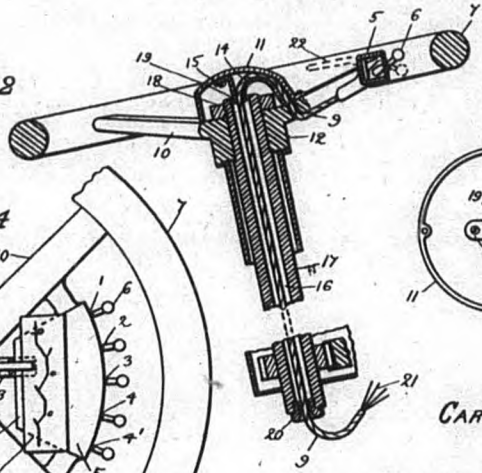

Fig. 3

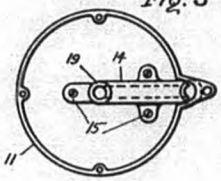

Fig. 4

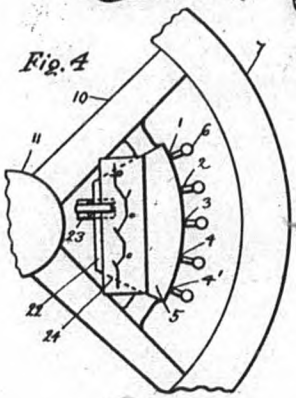

CARL G. FISHER
INVENTOR

BY John P. Nikonow
ATTORNEY

847.

No. 1675847

THE UNITED STATES OF AMERICA

TO ALL TO WHOM THESE PRESENTS SHALL COME:

Whereas CARL G. FISHER,

of

Port Washington, New York,

PRESENTED TO THE **Commissioner of Patents** A PETITION PRAYING FOR THE GRANT OF LETTERS PATENT FOR AN ALLEGED NEW AND USEFUL IMPROVEMENT IN

ELECTRIC SWITCH ATTACHMENTS,

A DESCRIPTION OF WHICH INVENTION IS CONTAINED IN THE SPECIFICATION OF WHICH A COPY IS HEREUNTO ANNEXED AND MADE A PART HEREOF, AND COMPLIED WITH THE VARIOUS REQUIREMENTS OF LAW IN SUCH CASES MADE AND PROVIDED, AND

Whereas UPON DUE EXAMINATION MADE THE SAID CLAIMANT is ADJUDGED TO BE JUSTLY ENTITLED TO A PATENT UNDER THE LAW.

NOW THEREFORE THESE **Letters Patent** ARE TO GRANT UNTO THE SAID

Carl G. Fisher, his heirs OR ASSIGNS

FOR THE TERM OF SEVENTEEN YEARS FROM THE DATE OF THIS GRANT

THE EXCLUSIVE RIGHT TO MAKE, USE AND VEND THE SAID INVENTION THROUGHOUT THE UNITED STATES AND THE TERRITORIES THEREOF.

In testimony whereof I have hereunto set my hand and caused the seal of the Patent Office to be affixed at the City of Washington this third day of July, in the year of our Lord one thousand nine hundred and twenty-eight, and of the Independence of the United States of America the one hundred and fifty-second

Attest:

G. R. Fuller
Law Examiner.

Thomas E. Robertson
Commissioner of Patents.

July 3, 1928. 1,675,847

C. G. FISHER

ELECTRIC SWITCH ATTACHMENT

Filed Sept. 30, 1924

Fig. 1

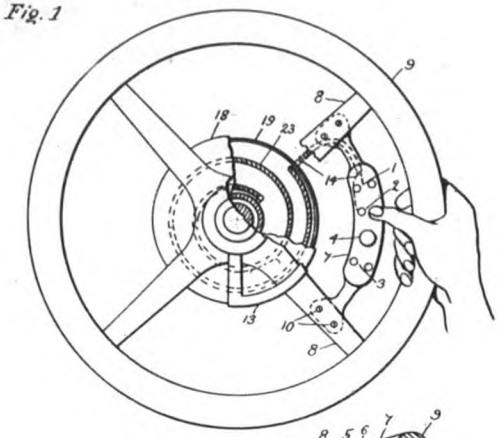

Fig. 2

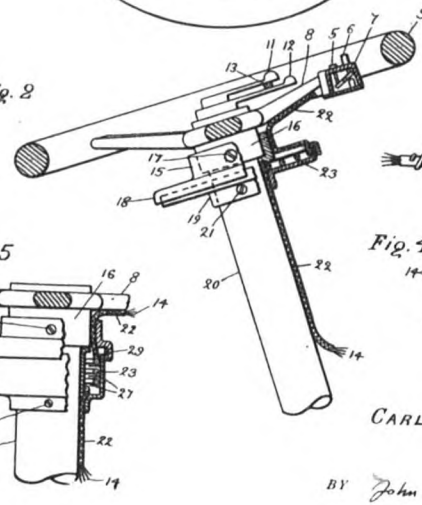

Fig. 3

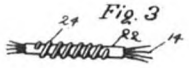

Fig. 4

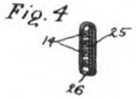

Fig. 5

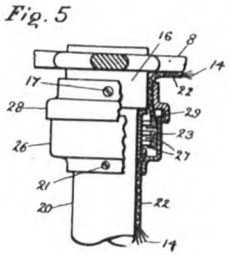

CARL G. FISHER

INVENTOR

BY John P. Nikonow

ATTORNEY

Patented July 3, 1928. 1,675,847

UNITED STATES PATENT OFFICE.

CARL G. FISHER, OF PORT WASHINGTON, NEW YORK.

ELECTRIC SWITCH ATTACHMENT.

Application filed September 30, 1924. Serial No. 740,777.

My invention relates to electric switch attachments and has a particular reference to attachment of switches controlling electric lights, ignition, warning signals etc. on automobiles and the like.

The object of my invention is to provide an electric switch attachment directly on the steering wheel within reach of the driver's fingers, so that he could operate the switches without losing his grip of the wheel.

I am aware that switches have been invented for mounting on top of the steering post, but such switches cannot move with the wheel, and in order to operate them the driver must remove one hand from the wheel or he must otherwise loosen his grip of the wheel. With my switch arrangement, however, the driver can use both his hands for steering, using only one of his fingers to operate any of the switches,—for instance, dimming the headlights or pressing the electric horn button.

In order to maintain an uninterrupted electrical connection between my switches and the rest of the electrical equipment, I provide a flexible lead or cable between the steering wheel and the stationary steering post, placing the cable in the form of several loops in a special housing and providing a spring arrangement to keep these loops under certain tension so as to avoid any irregular bunching or crowding of the cable in the housing.

My invention is more fully described in the accompanying specification and drawing in which—

Fig. 1 is a plan view of the steering wheel with my switch, showing also the cable loops in the housing partly in section, Fig. 2 is an elevation of same partly in section, Fig. 3 is a detailed view of the cable with the spring outside, Fig. 4 is another arrangement of the cable and the spring, and Fig. 5 is a sectional elevation of a modified housing with the spring cable.

My electric switch actually represents an aggregate of switches 1, 2 and 3. also of push buttons 4 (the latter usually for operating electric horns on automobiles). One of these switches is usually connected with main headlights, the other with dimmed lights and with a tail lamp, and one with the ignition circuit. These switches may be of any standard form or make, one of the convenient forms being shown in Figs. 1 and 2. Each switch contains two push buttons 5 and 6 so interconnected, that when one button is pushed down, the other automatically moves up. For instance, by pushing right buttons or plungers 6 the circuits are closed, and by pressing down the left buttons 5 the circuits are opened.

All these switches are mounted in a housing 7 formed integrally with spokes 8 of the steering wheel 9 or attached with screws 10. The housing 7 is made and arranged so that it does not interfere with the driver's hand holding the rim of the wheel, also it does not interfere with ordinary spark and throttle controlling levers 11 and 12 which are movable on a sector 13. This is accomplished by giving the housing substantially concentric shape with the rim of the wheel and providing a clearance for the driver's fingers, bringing it at the same time close enough to the driver's hand so that he can operate any of the switches or push buttons by simply extending his thumb, as shown in Fig. 1, without releasing or changing his grip of the wheel, and retaining his control of the particular switch while turning the wheel.

The leads 14 from the respective switches are brought through arms of the housing 7 along one of the spokes of the wheel 9 and down over a sleeve 15 attached to the hub 16 of the wheel 9 with screws 17. This sleeve has an enlarged bell shaped portion 18, partly covering but not touching a stationary cable housing 19 attached to the steering post 20 with screws 21. The cable or conduit 22, containing leads 14, is brought inside of the cable housing 19 near its periphery through the top cover 18. The cable is placed inside of the housing 19 in loosely wound loops 23 and brought down through an aperture in the housing 19, being fastened alongside of the steering column 20 and extended back of the instrument board (not shown) to be connected with leads to electric devices controlled by the switches described.

In operation of this device the loops 23 allow sufficient freedom of rotation for the wheel 9 within requirements of the steering gear construction. On ordinary automobiles the steering wheel makes from one and a half to two turns between extreme left and right position of the front wheels.

Therefore the loops 23 must allow at least one turn for the wheel either way from its neutral or straight ahead position.

This is accomplished by making sufficient number of loops 23 and having a sufficiently large difference in diameters of the cable housing 19 near its periphery and near its central portion, so that there must be a difference of at least two turns between two extreme positions of the cable inside of the housing: when it is all crowded towards periphery of the housing, and when it is wound tight around the central portion. The length of each turn at the periphery being greater, it follows that there will be fewer number of turns of cable when it is crowded towards the outer or peripheral portion of the housing.

The cable should be arranged so that for a neutral position of the wheel, with the wheels pointing straight ahead, the loops should be partly wound around the central portion, winding tighter with the wheel being turned in one direction, and unwinding with the wheel being turned in the other direction.

For a satisfactory operation of this device it is necessary to prevent the cable from crowding or bunching in one place in the housing, and this may be accomplished best by enclosing the cable in a spiral spring 24 (Fig. 3). The spring will tend to force the cable outward in the housing thereby keeping this cable constantly under a tension and preventing any looseness between the loops 23.

In order to reduce the diameter of the cable housing it is useful to make the cable flat (Fig. 4) by placing all individual leads 14 in a row and placing them at the side of a flat spring 25, covering all with a durable and flexible material 26, wound around or braided.

A modified arrangement is shown in Fig. 5. Here the cable loops 23 are placed in the form of a helical spring in an elongated housing 26 attached to the steering post 20 with screws 21. Separators 27 may be attached to the walls of the housing in order to keep the successive loops apart. These separators may be made in the form of flat rings or sectors and they should not reach all way to the central portion of the housing.

The bell shaped cover 28 protects the cable and the housing from dust and moisture. An additional protection may be obtained by introducing a layer of felt 29 or other similar dust proofing material between the housing and the cover. The cable in this case is also enclosed in a spiral spring 24 inside of the housing.

Important advantages of my switch mechanism are that the switches may be operated by the driver without his loosening his grip of the wheel, which is very important for the safety in driving, for instance, when the driver must dim his lights when passing another motorist on a narrow road, or when he must blow his electric horn when people or other vehicles suddenly appear in his path.

I claim as my invention:

In an electric switch attachment, the combination with a cylindrical housing, of a flexible cable spirally coiled in said housing, the outer wall of said housing extending above said cable, said housing being provided with an aperture for a steering post of an automobile, a bushing extending downward from said housing around said aperture and slidably fitting said post, means to attach said bushing to said post, one end of said cable extending from said housing down through said bushing, a cover for said housing, the outer wall of said cover extending outside of said outer wall of said housing, said cover being provided with an aperture for the hub of a steering wheel, a bushing extending from said cover around said aperture and adapted to fit said hub, means to attach said bushing to said hub, said cover being adapted to rotate with said wheel without touching said housing, the other end of said cable extending through said cover to said hub and to said wheel to electrical switches on said wheel, and means to render said cable resilient inside of said housing.

Signed at Port Washington, in the county of Nassau and State of New York, this 22 day of Sept. A. D. 1924.

CARL G. FISHER.

Patented July 3, 1928. 1,675,847

UNITED STATES PATENT OFFICE.

CARL G. FISHER, OF PORT WASHINGTON, NEW YORK.

ELECTRIC SWITCH ATTACHMENT.

Application filed September 30, 1924. Serial No. 740,777.

My invention relates to electric switch attachments and has a particular reference to attachment of switches controlling electric lights, ignition, warning signals etc. on automobiles and the like.

The object of my invention is to provide an electric switch attachment directly on the steering wheel within reach of the driver's fingers, so that he could operate the switches without losing his grip of the wheel.

I am aware that switches have been invented for mounting on top of the steering post, but such switches cannot move with the wheel, and in order to operate them the driver must remove one hand from the wheel or he must otherwise loosen his grip of the wheel. With my switch arrangement however, the driver can use both his hands for steering, using only one of his fingers to operate any of the switches,—for instance, dimming the headlights or pressing the electric horn button.

In order to maintain an uninterrupted electrical connection between my switches and the rest of the electrical equipment, I provide a flexible lead or cable between the steering wheel and the stationary steering post, placing the cable in the form of several loops in a special housing and providing a spring arrangement to keep these loops under certain tension so as to avoid any irregular bunching or crowding of the cable in the housing.

My invention is more fully described in the accompanying specification and drawing in which—

Fig. 1 is a plan view of the steering wheel with my switch, showing also the cable loops in the housing partly in section, Fig. 2 is an elevation of same partly in section, Fig. 3 is a detailed view of the cable with the spring outside, Fig. 4 is another arrangement of the cable and the spring, and Fig. 5 is a sectional elevation of a modified housing with the spring cable.

My electric switch actually represents an aggregate of switches 1, 2 and 3 also of push buttons 4 (the latter usually for operating electric horns on automobiles). One of these switches is usually connected with main headlights, the other with dimmed lights and with a tail lamp, and one with the ignition circuit. These switches may be of any standard form or make, one of the convenient forms being shown in Figs. 1 and 2. Each switch contains two push buttons 5 and 6 so interconnected, that when one button is pushed down, the other automatically moves up. For instance, by pushing right buttons or plungers 6 the circuits are closed, and by pressing down the left buttons 5 the circuits are opened.

All these switches are mounted in a housing 7 formed integrally with spokes 8 of the steering wheel 9 or attached with screws 10. The housing 7 is made and arranged so that it does not interfere with the driver's hand holding the rim of the wheel, also it does not interfere with ordinary spark and throttle controlling levers 11 and 12 which are movable on a sector 13. This is accomplished by giving the housing substantially concentric shape with the rim of the wheel and providing a clearance for the driver's fingers, bringing it at the same time close enough to the driver's hand so that he can operate any of the switches or push buttons by simply extending his thumb, as shown in Fig. 1, without releasing or changing his grip of the wheel, and retaining his control of the particular switch while turning the wheel.

The leads 14 from the respective switches are brought through arms of the housing 7 along one of the spokes of the wheel 9 and down over a sleeve 15 attached to the hub 16 of the wheel 9 with screws 17. This sleeve has an enlarged bell shaped portion 18, partly covering but not touching a stationary cable housing 19 attached to the steering post 20 with screws 21. The cable or conduit 22, containing leads 14, is brought inside of the cable housing 19 near its periphery through the top cover 18. The cable is placed inside of the housing 19 in loosely wound loops 23 and brought down through an aperture in the housing 19, being fastened alongside of the steering column 20 and extended back of the instrument board (not shown) to be connected with leads to electric devices controlled by the switches described.

In operation of this device the loops 23 allow sufficient freedom of rotation for the wheel 9 within requirements of the steering gear construction. On ordinary automobiles the steering wheel makes from one and a half to two turns between extreme left and right position of the front wheels.

Therefore the loops 23 must allow at least one turn for the wheel either way from its neutral or straight ahead position.

This is accomplished by making sufficient number of loops 23 and having a sufficiently large difference in diameters of the cable housing 19 near its periphery and near its central portion, so that there must be a difference of at least two turns between two extreme positions of the cable inside of the housing: when it is all crowded towards periphery of the housing, and when it is wound tight around the central portion. The length of each turn at the periphery being greater, it follows that there will be fewer number of turns of cable when it is crowded towards the outer or peripheral portion of the housing.

The cable should be arranged so that for a neutral position of the wheel, with the wheels pointing straight ahead, the loops should be partly wound around the central portion, winding tighter with the wheel being turned in one direction, and unwinding with the wheel being turned in the other direction.

For a satisfactory operation of this device it is necessary to prevent the cable from crowding or bunching in one place in the housing, and this may be accomplished best by enclosing the cable in a spiral spring 24 (Fig. 3). The spring will tend to force the cable outward in the housing thereby keeping this cable constantly under a tension and preventing any looseness between the loops 23.

In order to reduce the diameter of the cable housing it is useful to make the cable flat (Fig. 4) by placing all individual leads 14 in a row and placing them at the side of a flat spring 25, covering all with a durable and flexible material 26, wound around or braided.

A modified arrangement is shown in Fig. 5. Here the cable loops 23 are placed in the form of a helical spring in an elongated housing 26 attached to the steering post 20 with screws 21. Separators 27 may be attached to the walls of the housing in order to keep the successive loops apart. These separators may be made in the form of flat rings or sectors and they should not reach all way to the central portion of the housing.

The bell shaped cover 28 protects the cable and the housing from dust and moisture. An additional protection may be obtained by introducing a layer of felt 29 or other similar dust proofing material between the housing and the cover. The cable in this case is also enclosed in a spiral spring 24 inside of the housing.

Important advantages of my switch mechanism are that the switches may be operated by the driver without his loosening his grip of the wheel, which is very important for the safety in driving, for instance, when the driver must dim his lights when passing another motorist on a narrow road, or when he must blow his electric horn when people or other vehicles suddenly appear in his path.

I claim as my invention:

In an electric switch attachment, the combination with a cylindrical housing, of a flexible cable spirally coiled in said housing, the outer wall of said housing extending above said cable, said housing being provided with an aperture for a steering post of an automobile, a bushing extending downward from said housing around said aperture and slidably fitting said post, means to attach said bushing to said post, one end of said cable extending from said housing down through said bushing, a cover for said housing, the outer wall of said cover extending outside of said outer wall of said housing, said cover being provided with an aperture for the hub of a steering wheel, a bushing extending from said cover around said aperture and adapted to fit said hub, means to attach said bushing to said hub, said cover being adapted to rotate with said wheel without touching said housing, the other end of said cable extending through said cover to said hub and to said wheel to electrical switches on said wheel, and means to render said cable resilient inside of said housing.

Signed at Port Washington, in the county of Nassau and State of New York, this 22 day of Sept. A. D. 1924.

CARL G. FISHER.

July 3, 1928. 1,675,847

C. G. FISHER

ELECTRIC SWITCH ATTACHMENT

Filed Sept. 30, 1924

Fig. 1

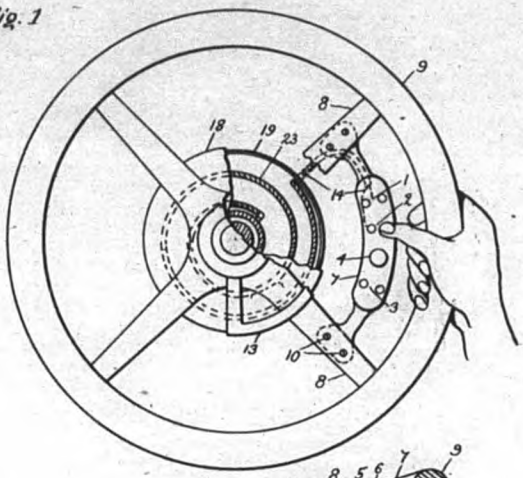

Fig. 2

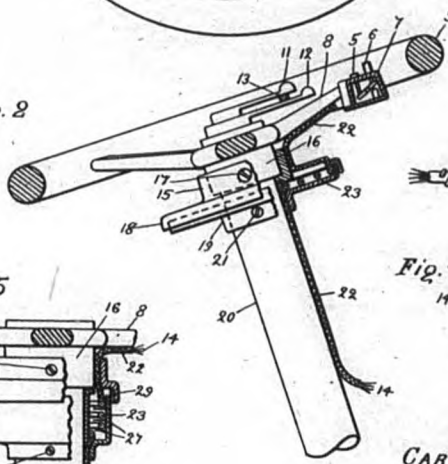

Fig. 3

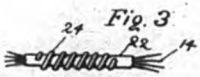

Fig. 4

Fig. 5

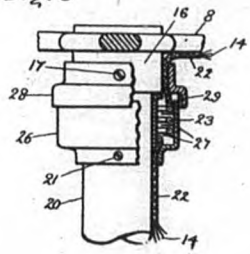

CARL G. FISHER

INVENTOR

BY John P. Nissenson

ATTORNEY

11

Patents Copy (1928)

A S S I G N M E N T

WHEREAS I, CARL G. FISHER, of Port Washington, county of Nassau and State of New York, have invented certain improvements in the

ELECTRIC SWITCH ATTACHMENTS

for which I made an application for letters patent of the United States, serial No. 740,776, dated Sept. 30, 1924; and

WHEREAS, Thomas Milton, of Port Washington, in the county of Nassau and States of New York, and John P. Nikonow, of 3425 Giles Pl., New York, of the county and State of New York, are desirous of acquiring an interest in the same:

NOW, THEREFORE, in consideration of one dollar and other valuable considerations the receipt of which is hereby acknowledged, I, Carl G. Fisher, by these presents do sell, assign and transfer unto Thomas Milton one undivided third part and unto John P. Nikonow one undivided third part in and to the said invention and in and to the letters patent which may issue therefor; and I hereby request the Commissioner of Patents to issue said letters patent jointly to myself and to said Thomas Milton and John P. Nikonow.

Executed ----- day of ------- -, 1928

Copy

A S S I G N M E N T

WHEREAS I, Carl G.Fisher, of Port Washington, in the county of Nassau and State of New York, did obtain letters patent in the United States for an improvement in the

ELECTRIC SWITCH ATTACHMENTS

which letters patent are numbered 1,674,966 and bear date of June 26,1928; and

WHEREAS , Thomas Milton, of Port Washington, in the county of Nassau and State of New York, and John P.Nikonow, of 3425 Giles Pl., New York, in the county and State of New York, are desirous of acquiring an interest in the same:

NOW, THEREFORE, in consideration of the sum of one dollar and other valuable considerations ,the receipt of which is hereby acknowledged, I,Carl G.Fisher, by these presents do sell, assign and transfer unto the said Thomas Milton ,one undivided third part, and unto the said John P.Nikonow one undivided third part of the whole right,title and interest in and to the said invention and in and to the said letters patent therefor; the said parts to be held by Thomas Milton and John P.Nikonow for their own use and behoof, and their legal representatives to the full end of the term for which said letters patent are granted, as fully and entirely as the same would have been held by me had this assignment and sale not been made.

Executed ------ day of -------- - 1928

Copy

A S S I G N M E N T

WHEREAS I, Carl G.Fisher, of Port Washington, in the county of Nassau and State of New York, did obtain letters patent in the United States for an improvement in

ELECTRIC SWITCH ATTACHMENTS

which letters patent are numbered 1,675,847, and bear date of July 3, 1928; and

WHEREAS, Thomas Milton, of Port Washington, in the county of Nassau and State of New York, and John P.Nikonow, of 3425 Giles Pl., New York, in the county and State of New York, are desirous of acquiring an interest in the same:

NOW,THEREFORE, in consideration of the sum of one dollar and other valuable considerations ,the receipt of which is hereby acknowledged, I, Carl G.Fisher, by these presents do sell,assign and transfer unto the said Thomas Milton ,one undivided third part, and unto the said John P.Nikonow, one undivided third part of the whole right,title and interest in and to the said invention and in and to the said letters patent therefor;the said parts to be held by Thomas Milton and John P.Nikonow for their own use and behoof , and their legal representatives to the full end of the term for which said letters patent are granted,as fully and entirely as the same would have been held by me had this assignment and sale not been made.

Executed ——— day of ————, 1928

———————

TELEPHONE KINGSBRIDGE 3068

MEMBER A. S. M. E., A. I. E. E., S. A. E.

J. P. NIKONOW
MECHANICAL AND ELECTRICAL ENGINEER
PATENT ATTORNEY
3425 GILES PLACE
NEW YORK, N.Y.

Patents

Aug. 6,1928

Mr. Carl G.Fisher
Port Washington, L.I.,N.Y.

My dear Mr. Fisher:

I was pleased to learn that you are playing tennis again, and I certainly would be glad to come out to Port Washington with my tennis things. I assume that you are playing as before ,that is at 3 P.M. I can take a train and get a taxi at P.W. station. Just let me know what days you are playing or when you want me to come. I certainly enjoyed those tennis sessions we had a few years ago at your place. I also want to meet Mr. Thomas Milton and explain to him all the details of this proposition. I also want to do all I can for the development of these inventions.

I am enclosing assignment papers for you to sign before the notary public. I think it will make a very good arrangement to split the assignment three ways.

I regret that it took so long to get the patents granted. I believe,however, that nothing was lost by this delay. In fact, your prediction of four years ago is only beginning to be realized, and the cars are placing the switches on the steering wheel. It shows that the industry is ready for good inventions in this line.

But here is where the difference comes in. All the other switches are mounted in the center of the steering post and are stationary. It means that the driver must take his hand off the wheel in order to operate any of these switches. There are many objections to this. At night, passing a car on a narrow and dangerous turn, one wants to keep both his hands on the wheel. Or if anybody suddenly appears in front of your car, and you want to make a quick turn, pull on emergency brake etc.,again you find that you have no extra hand to spare for the horn button in the center of steering post.

I firmly believe that in the future only those switches will be in the greatest demand which can be operated by the driver's fingers without removing his hands from the wheel. And our three patents cover all the possible variations of such an arrangement. A few more patents may be obtained for the construction of the switch itself.

I am enclosing another set of copies of the patents.

You can call me up at day time in my office. My telephone is : Cortland 7342.

Very truly yours

J. Nikonow

C O P Y

Claims as Allowed
Application 388,152
Filed August 24, 1929
By Carl G. Fisher
For Life Boat.

---

1. A Life Boat having buoyant means associated therewith, a container for signaling apparatus, a balloon adapted to be attached to, to rise above the boat and having signaling devices supported thereby, and a drum detachably suspended from the balloon having means for gradually supplying gas to the balloon to compensate for gas escaping from the balloon, substantially as set forth.

2. A Life Boat having signaling apparatus mounted thereon, the said signaling apparatus comprising a balloon, a gas burner mounted upon the balloon, a gas drum suspended from the balloon, means for permitting gas to be fed from the drum to the balloon, and means for permitting gas to be fed from the balloon to the burner yto maintain a signaling light, substantially as set forth.

3. A signalling apparatus for a Life Boat comprising a balloon anchored to the boat, means for raising a lowering the balloon, a gas drum mounted below the balloon, means for supplying gas from the drum to the balloon, a plate mounted upon the balloon, a transparent housing mounted upon the plate, a gas burner within the housing, means for supplying gas from the balloon to the burner, and means for adjusting the rate of flow of the gas from the balloon to the burner and from the drum to the balloon to maintain a predetermined pressure within the balloon, and a

predetermined supply of gas to the burner, substantially as set forth.

4. A signaling apparatus for a Life Boat comprising a balloon anchored to the boat, means for raising and lowering the balloon, a gas drum mounted below the balloon, means for supplying gas from the drum to the balloon, a plate mounted upon the balloon, a transparent housing mounted upon the plate, a gas burner within the housing, means for supplying gas from the balloon to the burner, means for adjusting the rate of flow of the gas from the balloon to the burner and from the drum to the balloon to maintain a predetermined pressure within the balloon, and a predetermined supply of gas to the burner, and means for automatically lighting the burner whtn the gas is supplied thereto, substantially as set forth.

5. A Life Boat having gas compartments built into each end to provide buoyance for the boat, a reel rotably secured at one end of the boat, a storage chamber for signaling apparatus positioned adjacent the said reel, a cable wound around the reel having the balloon attached to one end, a gas drum detachably secured to the lower end of the balloon to supply it with gas and a signal light mounted upon the balloon, and means for controlling admission of gas from the drum to the balloon to maintain the balloon inflated, substantially as set forth.

#3.

6. A signal device for a Life Boat comprising a balloon attached to rise above the life boat, means for maintaining a predetermined gas pressure within the balloon to maintain it aloft, a signal light carried by the balloon, and means for maintaining the light by escaping gas from the balloon, substantially as set forth.

7. A signaling apparatus for a life boat comprising a balloon anchored to the boat, a gas drum mounted below the balloon, means for inflating said balloon from said gas drum to cause it to rise, a plate mounted in the top of said balloon, a transparent housing mounted upon the plate, a gas burner within the housing, means for supplying gas to said burner from the inflated balloon, means for maintaining a predetermined pressure in said balloon by regulating the rate of flow of the gas from said tank to said balloon, means for maintaining a predetermined pressure in said balloon by regulating the rate of flow of the gas from said tank to said balloon, means for maintaining a predetermined supply of gas from said balloon to said burner, and means incorporated in said burner for automatically lighting the same when the gas is supplied thereto, substantially as set forth.

Patents

August 28, 1929.

Lieutenant Alford J. Williams, Jr.,
U.S. Naval Aircraft Station,
Philadelphia, Pennsylvania.

Dear Lieutenant Williams:

I recently took out some patents on some life-saving devices that I believe you would be interested in. I am going to form a small independent company to place these articles on the market.

I have three distinct outfits applied for in my patents, including collapsible rubber pontoon, steel spring rubber covered boat that will stand terrific amounts of abuse, also an aerial safety light or distress signal.

I am quite sure there is a market for these articles and it looks like the market might be very large. I heard the other day that you were intending to get into business, and these particular articles would be in lines which you are very familiar with and it should be very easy for you to get business in large quantities with these articles.

If you are interested at all and care to talk the matter over with me, call in and see me at Montauk most any time.

Very truly yours,

CGF:T

ERNEST W. BRADFORD

J. F. GULICK
WARREN E. COLEMAN
E. K. REICHENBACH

O. M. KEYS
SECRETARY

SUITE 516 GUARANTY BUILDING
INDIANAPOLIS, INDIANA

PHONE NATIONAL 3427

ERNEST W. BRADFORD
LAWYER
SUITE 1100, NATIONAL PRESS BUILDING
WASHINGTON, D. C.

PATENT, TRADEMARK AND
CORPORATION LAW

Patents
Corp

May 31, 1930.

Mr. Carl G. Fisher
Montauk, Long Island, N.Y.

Dear Mr. Fisher:

I have your letter of the 29th and pursuant to your instructions I am depositing the final government fee in the Patent Office today and the patent on your Life Boat will issue in about four weeks when it will be forwarded to you.

With kind personal regards, I remain

Yours very truly,

Ernest W. Bradford

OK

December 7th 1931.

Mr. Ernest W. Bradford,
Suite 1100, National Press Building,
Washington, D.C.

Dear Mr. Bradford:

Thanks for yours of the 3rd. I am having a set of tires made using silica sand in the tread. What I really want is a substance in the tread that would assist them in being non-skidding on railroad rails.

We are soon to have a test on the rail car here, and we have most of our problems entirely solved, but slipping of the tire in wet weather on the railroad rails may cause some confusion.

I am enclosing a check for $10.00 to cover your bill.

Yours very truly,

C. C. FISHER

CCF-HM
Enclosure.

December 5th 1931.

Mr. H. Robinson,
Curtiss Aerocar Company,
Opelocka, Fla.

Dear Mr. Robinson:

Attached herewith you will find copy of letter which I just received from J. W. Thomas, V.P., The Firestone Tire & Rubber Company, also copy of my reply, regarding rubber tires on rail cars.

Yours,

C. C. FISHER

CCF-HM

December 5th 1931.

Mr. J. W. Thomas, V.P.,
The Firestone Tire & Rubber Company,
Akron, Ohio.

Dear Mr. Thomas:

Replying to your favor of the 2nd, we anticipate the trouble which you refer to in solid or cushion tires on the rail, but have an idea of an insert in the rim of the car wheel, with something of a ventilating process, which will help keep the insert cool. The rim of the wheel in contact with the rail will assist also in carrying the load, where the pressure is unusual.

Of course this experiment may show us several bugs that must be overcome. The silica sand in the mixture, we thought was worth a trial to see just what the gripping surface would be. As it is a rather inexpensive test, and if it is not too much trouble for you, we thought it worth while to test these tires on a road car.

We will make some experiments in the near future with a very small cushion on a tire on our rail job, and will be glad to give you the results of this test later.

Very truly yours,

C. G. FISHER

CGF-HH

Patents

January 31st 1933.

Hon. Fred A. Britten,
House of Representatives,
Washington, D.C.

Dear Fred:

My patent attorney in Washington is Mr. E. W. Bradford. I have applied for a patent for the use of silica sand in the surface of any rubber, or compound of same.

I have had some tires, made by the Firestone Company, in service for a year, and I believe they show a very decided improvement over pure rubber. There is no question but that for rail cars this silica sand surface is not only desirable, but absolutely necessary. For rubber belting and for lining of friction clutches and couplings, for rubber bands of conveying machinery, for rubber heels on shoes, and sole leather, a great degree of increased life can be added, and without any deterioration a very marked degree of safety is added.

Several patents have been applied for using ground iron and steel filings, insertions of wire, etc., but silica sand is, as you know, very much harder than any of these other materials, also it lends itself particularly to casting with rubber material in a very economical manner. The degree of the contents can be varied to suit the requirements of wear.

If I can get a patent on this idea, I believe it is going to be very valuable. It is going to require considerable time and effort both on my patent attorney and my lawyer. My patent attorney Mr. Bradford is automatically in 5% on all patents that I apply for, my attorney here, Mr. Frank Katzentine, present Mayor of Miami Beach is automatically in 10%, and I also declare you in 10%, my wife Margaret Fisher 20%.

Fred Britten - #2

I would consider this patent if it could be secured, one of the most valuable patents that I can imagine, and it will probably have to be defended in the Courts. If you have a chance drop over and talk to Mr. Bradford.

I am testing several tires at this time, but have not had an opportunity to make other tests which should be made immediately. Will write you further in the next week.

Yours,

CARL G. FISHER

CGF-MM

Copy to:
Mr. E. W. Bradford
Mr. A. Frank Katzentine
Mrs. Margaret C. Fisher

Patents

Mr. E. W. Bradford,
1100 National Press Building,
Washington, D.C.

March 8th 1933.

Dear Mr. Bradford:

At Mr. Fisher's request I am ~~enclosing herewith~~ forwarding in this mail diagramatical drawing of an invention of Albert Theodore Bremser, pertaining to the producing of low temperatures in a combination of apparatus, consisting of a socalled sun or solar heater, and a cooling system of the absorption type such as is being used in the Electrolux.

I am attaching herewith a copy of a letter addressed to Mr. Carl G. Fisher by Albert Theodore Bremser, wherein he agrees to give Mr. Fisher a 52% interest in his invention, together with a copy of a letter addressed to Mr. Bremser by Mr. Fisher, dated May 8th, acknowledging the receipt of Bremser's letter of March 7th, amplifying to some extent the agreement between Messrs. Fisher and Bremser.

I am also enclosing a full page detailed description prepared by Bremser, and Mr. Fisher desires that you prepare application for patents covering this method, system, etc., and when completed that you forward to Bremser for his signature, the application, advising us at the same time of your having forwarded same to Bremser, so that we may be in constant touch with developments concerning this particular subject.

From the enclosed letters you will note Mr. Fisher has agreed to assume and pay the cost of the applications, and this is your authority from Mr. Fisher to proceed with that understanding, billing to him the cost, including Government fee, and for your services.

Mr. Bremser is driving north tonight, and it is his intention to call on you in Washington enroute to his home in Westmont, N.J. We are therefore sending these papers by air mail today, in order that they may be in your hands as and when Bremser calls on you, the purpose of the call being to present to you in greater detail his ideas in connection with this invention.

It is the writer's belief that there should be prepared for filing, either now or subsequently at your discretion, a regular form of assignment, so that same may be on record in the Government files, signed by Bremser, conveying to Mr. Fisher a 52% interest in the invention, and we request that you please prepare such papers or assignment as required for that purpose, so that we may present or you may forward same to Bremser for his signature and execution.

Will you kindly acknowledge receipt of this letter, so that we may know the papers, drawings, etc. have safely reached you, and that you are fully informed as to what his desire in the matter is.

Yours very truly,

E. B.

March 8th 1933.

Mr. Albert T. Bremser,
51st Street Apartment,
Miami Beach Fla.

Patents

Dear Albert:

This will acknowledge receipt of your letter of March 7th 1933, confirming verbal agreement whereby you agree to give me a 52% interest in the invention, the subject matter of which pertains for the producing of low temperatures in a combination of apparatus, consisting of a so-called sun or solar heater, and a cooling system of the absorption type such as is being used in the Electrolux, as outlined on a drawing signed by you as inventor on March 2nd 1933, and witnessed by me and Garrett P. Heath on March 2nd 1933.

We are in agreement as regards the understanding relative to patent attorney's cost to make patent application, etc. as outlined in the last paragraph of your letter, and I assume that in the event of improvements in connection with this apparatus, etc. which you may develop in the course of time, that you will divulge said improvements, and assist in the preparation and filing of the patent application, in the same manner and to the same extent as prevails in connection with the original invention as referred to in your letter of the 7th.

In other words, my understanding of the purpose of this agreement is that we may work together in securing of the patent or patents so that we shall mutually share in the greatest extent possible in any benefits that may be derived through the medium of this, your invention, and subsequent inventions on the same subject.

I on my part agree to do everything possible to promote the use or sale of any patent or patents which may be obtained, so that the benefits to be derived may be mutually shared to the extent and in the same manner as agreed upon.

Yours very truly,

CARL G. FISHER

FRH-hm

March 14th 1933.

Mr. Ernest W. Bradford,
1100 National Press Building,
Washington, D.C.

Patents

My dear Mr. Bradford:

Regarding the invention of Mr. Bremser, in which I have a controlling interest for the purpose of promotion, I would like to have you advise me what it would cost to make applications for this patent in foreign countries, where they are applicable, and do they have a system of delayed patent applications that give protection?

Yours,

CARL G. FISHER

CGF-HM

C

October 29, 1934.

Hartley's Patent Sales Agency, Inc.,
Merchants National Bank Bldg.,
Bangor, Me.

Gentlemen:

I understand you are interested in the promotion of patents that have merit.

I have recently been issued a patent using a combination of silica sand mixed with rubber, which furnishes a very tough semi-skid proof material for rubber soles on shoes, rubber belting, rubber hammers and all other types of rubber surfaces where the speed is not too great.

I have had the Firestone Tire Company make a great many experiments using this silica sand in the surfaces of their tires, but the high speed of the tire in contact with the ground has a tendency to stretch, of course, and loosen these particles of silica.

However, with this disadvantage of high speed, the silica substance gave rather good results and may yet work out satisfactorily, in slow-speed solid tires.

If you think you might be interested, I can give you further particulars. However, I do not care to advance any cash, do any promotion work or any other work in connection with the proposed sale of these patent rights.

Yours very truly,

CGF/vhs

CARL G. FISHER

HARTLEY'S RELIABLE PATENT SALES AGENCY, INC.

MERCHANTS NATIONAL BANK BUILDING
BENJAMIN T. SHAW, PRESIDENT — BANGOR, MAINE — FRED D. OLIVER, TREASURER

Nov. 9, 1934.

Member of Bangor Chamber of Commerce

INVENTIONS SOLD---A REAL SERVICE FOR INVENTORS. DRAWINGS PREPARED AND BLUE PRINTS MADE

WHEN ANSWERING THIS LETTER PLEASE GIVE NO. OF YOUR PATENT

Carl G.Fisher,
The Carl G.Fisher Co.,
Miami Beach, Fla.

Dear Mr.Fisher:-

Yours of Oct. 29th at hand and will say we require a cash in advance fee as indicated by our plans on the last page of this letter, but you say you do not care to advance any cash, so presume you will not be interested.

However from your letter we are of the opinion you may have a very good patent, and we would advise that you try and get it on the market. This of course we imagine will cost you money. We do not know of any patent concern in the U.S. or Canada who ACTUALLY handle inventions on a commission basis. There are we will admit many who pretend to do so but they are only aiming to tie the inventor up with a contract then extract as many fees as possible for worthless prospectuses, commercial appraisals, valuation reports, etc. that are absolutely worthless to the inventor.

We have a large list of concerns we would like to present your special invention to Mr. Fisher some of whom are rated in the millions and if only interested in your special invention could place more of them on the market in a year than others could in fifty.

You have spend the price of a patent on your Semi-skid Proof Material and we think it far more advantageous to spend the price of a fee trying to sell it. Selling an invention is far more important than getting it patented. Of course just that you have a pretty blue ribboned patent does not make it salable. You had to pay your patent fees in advance. We might go ahead and spend $50 or more dollars trying to sell it, and thru no fault of ours find it unsalable, which is often the case with many patents.

Why do you hesitate in spending a plan fee on it? Have you tried to sell it before and think it unsalable, or what?

Yours very truly,
Benj T Shaw
President

S/H

STENOGRAPHIC AND CLERICAL ERRORS SUBJECT TO CORRECTION

References as to Hartley's Reliable Patent Sales Agency, Inc.

THIS IS TO CERTIFY that we, the undersigned, have seen the ORIGINAL SIGNATURES, signed by the ORIGINAL INVENTORS, on the testimonials used in its literature, also on a large number of other testimonials which it has on file in its office, and know beyond a doubt that it is honest in its dealings.

CHARLES E. MILLETT, CITY TREASURER, BANGOR, MAINE.
H. EUGENE COLLETT, VICE PRESIDENT MERRILL TRUST CO., BANGOR, MAINE.
STEPHEN E. CONNERS, 179 EXCHANGE ST., BANGOR, MAINE.
HORACE S. STEWART, VICE PRESIDENT MERCHANTS NATIONAL BANK, BANGOR, ME.

Four witnesses as above are as good as a million. A word to the wise is sufficient, but volumes would not convince the unwise.

The above persons' reputations are of the best in the State. In writing for information, please be brief and enclose a self addressed stamped envelope, as these men are very busy. This will insure a prompt reply.

PERSONAL GUARANTEE

Hartley's Reliable Patent Sales Agency, Inc., does hereby guarantee to do just as it agrees with every inventor that it does business with.

As we got in touch with thousands of INVENTORS last year, the inventors whose testimonials we have used were swamped with letters and have requested us not to use their addresses with their testimonials, as they could not bother answering so many long letters, so we have shown these testimonials to the above City and Bank Officials, in proof of the enclosed testimonials, and we wish you would not bother them with a long drawn out letter, unless you really mean business, so we will not have to discontinue using their names.

I am acquainted with Frank P. Hartley, of Bangor, Maine, and his facilities of handling inventions and patents. I had a patent on a Curtain Holding Device that was NINE YEARS OLD, and had given up trying to sell it years ago, but a few weeks ago I decided to let Mr. Hartley try to sell it and it was only a short time before I received a letter to come to his office and receive my check as he sold it to a promotor from another State. His service was worth ten times the price he charged me and if I have another invention to sell, Mr. Hartley will be the man I will employ.—Signed RODNEY LYNK, Maine.

This is to certify that Frank P. Hartley has placed my invention for a much larger amount than I expected and I gladly recommend his services to anyone having an invention todispose of, and wish good services. I have had considerable experience with patent promotors, but Mr. Hartley is the most sincere and earnest worker I have ever seen. It is gratifying to know that there is at least one dependable patent agent in the United States, and one that earns his money and gives the inventor a SQUARE DEAL.—Signed, NEIL A. ROBERTSON, Maine.

Within three weeks from the time I placed my invention on a Mail Box, in Frank P. Hartley's hands to sell, he interested the Metal Products Company in regard to buying it outright, for cash at a reasonable figure. His services were worth a dozen times the fee I paid him and if I had a hundred more inventions I would place them all in his hands to dispose of.—Signed, WILLIAM M. COLLINS, W. Virginia.

Within sixty days from the date I placed my invention on a Lace Making Implement in Mr. Hartley's hands to dispose of he interested a concern in Chicago in regard to buying my invention for a cash price and a royalty.—Signed, MRS. EDLA M. GOURLEY, Illinois.

Within thirty days from the time I placed my invention on the Dispensing Device in Mr. Frank P. Hartley's hands to sell, he helped me place my invention on a cash and royalty basis with a moneyed man in Chicago, Ill. Signed—GEORGE G. GRANGER.

Within one month from the time I placed my invention on a Game Counter in Mr. Hartley's hands to dispose of he interested a large concern in Evanston, Ill., in manufacturing it on a royalty basis. I am very much satisfied with Mr. Hartley's way of handling inventions and his service is well worth the price of his plans.—Signed, ROBERT H. MARTIN, New Hampshire.

TO WHOM IT MAY CONCERN: This is to certify that Frank P. Hartley, has interested four large concerns in my two inventions, which I placed in his hands, taking out Plan No. 3 on each invention and for which I am very much satisfied with the manner in which he is handling same.—Signed, A. W. HERRICK, Michigan.

TO WHOM IT MAY CONCERN: This is to certify that Frank P. Hartley, interested a large concern in Boston, Mass., in my invention, which is patent pending, on FURNITURE PADS, within ten days after I placed same in his hands. I am very much satisfied with the efforts he is showing with regards to handling my invention, and recommend his service highly to inventors.—Signed, VICTOR E. SEVERY, Maine.

This is to certify that Frank P. Hartley has just interested two large concerns in my invention on a Seesaw within three weeks after I took out his plan No. 2.—Signed A. A. LOVEJOY, Indiana.

I believe that Frank P. Hartley, has one of the fairest methods for selling inventions of any I have ever seen, and I believe that if a patented or unpatented invention is saleable he will sell it. I do not blame him for not wanting to sell an invention on a commission basis, because too many patents are infringing prior patents and are worthless. I took out Mr. Hartley's Plan No. 2, and within two weeks he got a large concern that was equipped to manufacture my invention interested in the same, but at about the same time we found that my patent was an infringement on a prior patent and worthless. It was NOT Mr. Hartley's fault for not closing the deal and selling the invention, but the fault of the invention infringing a prior patent, the same as thousands of subsequent patents that issue infringe prior patents.—Signed, ANDREW RAYBUCK.

TO WHOM IT MAY CONCERN: Mr. Frank P. Hartley of Bangor, Maine, interested a firm in the manufacturing of my invention on a Chiropractor Table within 30 days from the time I placed it with him for sale. I believe Mr. Hartley will give the inventor a square deal. I am convinced he is a live wire and knows the patent selling game.—Signed, HANCIL CORDREY, California.

TO WHOM IT MAY CONCERN: This is to certify that I placed my invention on a KEY CASE in Frank P. Hartley's hands under his Plan No. 2, and he interested ten concerns in purchasing the same. I am very much pleased with the interest Mr. Hartley has taken in my behalf, and recommend his service highly to any inventors.—Signed, G. M. WHITE, New Hampshire.

This is to certify that Frank P. Hartley has just interested a manufacturing concern in regard to manufacturing my invention on a Soldering Implement, on a ROYALTY BASIS. I will say that he does just as he agrees to do in his plans.—Signed, RAYMOND J. GRETZ, Pennsylvania.

Reference: This is to certify that Mr. Hartley, of Bangor, Maine, has interested two different concerns in buying my invention on a Globe and Check Valve, and I take pleasure in recommending him to other inventors. I have recommended him to my friend inventors as a man who is honest and will do exactly what he says.—Signed, N. H. LOPOSEN, Louisiana.

THIS IS TO CERTIFY THAT Hartley's Reliable Patent Agency, has interested five large concerns in my invention on on a Coat Fastener, and will certainly recommend his service to any inventor, who wishes to get his invention on the market.—Signed, WM. M. HALLONER, Missouri.

Mr. Hartley has interested in the past week, THREE DIFFERENT CONCERNS IN BUYING MY INVENTION on a Hand Rest and Guide for automobile steering wheels, and I take pleasure in recommending him to other inventors.—Signed, RUFUS D. WADLEIGH, Maine.

TO WHOM IT MAY CONCERN: Mr. Frank P. Hartley of Bangor, Maine, interested four concerns in my invention on a Combination Box within a few weeks after I placed it in his hands to sell. This gave me a better chance to get a higher price for my invention.—Signed T. P. BIRD, Maryland.

Within fourteen days from the time I placed my invention on a Vending Machine in Frank P. Hartley's hands to dispose of he interested the Silent Sales Vending Co., in regard to buying it outright, under Plan. No. 2—Signed, W. D. AMBROSE, Texas.

I am well acquainted with Frank P. Hartley, of Bangor, Maine, and his facilities for handling inventions. I had an invention of merit and needed to get in touch with capital. Mr. Hartley did the trick within a week.—Signed, C. M. BRAGDON, Maine.

This is to certify that Frank P. Hartley has interested two large concerns, one located in Napoleon, Ohio, and the other in Alma, Wisc., in my invention on a Safety Milk Bottle Retainer, and Mr. Hartley is certainly doing justice to my invention, under his method of doing business.—Signed, LEE E. ABBE, Oregon.

WITHIN THREE WEEKS FROM THE TIME I placed my invention on an Animal Poke in F. P. Hartley's hands to dispose of he interested a large concern in Minneapolis, Minn., in the same.—Signed, JOHN BOLF, Texas.

I am one of the many men that I know of that Mr. Hartley has sold patents to, and I will say that I have found him to be reliable and honest with both inventor and buyer.—Signed, D. LLOYD JONES, Maine.

TO WHOM IT MAY CONCERN: This is to certify that within two weeks from the time I placed my invention on a Car Seal in Frank P. Hartley's hands to sell, he interested two concerns that manufacture Car Seals in the same, under Plan No. 2. I will say Mr. Hartley is right on the job, and does more than he agrees with the inventor. I am pleased to know there is one patent salesman in the United States that does as he agrees.—Signed, E. C. YEOMAN, Illinois.

I have purchased two patents from Mr. Frank P. Hartley, besides having other relations with him. I can highly recommend him for his promptness and squareness in all his dealings with his clients, and in making their interests his own throughout the transaction.—Signed, HARRY R. HULLEY, Maine.

If a patent is saleable, Mr. Hartley, the Patent Man, can sell it. I know of men to whom he has sold patents in the past, and if I had an invention and wanted someone to handle it, Mr. Hartley would be the man, even if I had to pay him twice his regular fee. I know that he sold an invention for a large amount to some of my friends and myself, and under the circumstances I do not believe another man in the state could have done it.—Signed, CHAS. O. BOLDUC, Maine.

WITHIN TWO WEEKS FROM THE TIME I PLACED my invention on a Pie Dough Cutter and Mixer in Mr. Frank P. Hartley's hands to dispose of, under his Plan No. 2, he interested two large concerns in the same, and I am very much impressed with the way he is handling my invention.—Signed, MARY P. SODERBERG, Oregon.

There is one thing very certain, Mr. Hartley, and that is that you do not sleep at the switch, but get into the game immediately. I am only sorry I did not get in touch with you a year ago.—Signed F. G. DYER, Mississippi.

Within a short time after I placed my invention on an Arch Support in Mr. Hartley's hands to dispose of, he interested five large concerns in the same, located in the following cities: Chicago, Ill.; New York, N. Y.; Cincinnati, Ohio; and two in Boston, Mass. And I am certainly very much pleased with the manner in which Mr. Hartley has handled this matter for me.—Signed, ARCHIE H. FARNUM, Maine.

THIS IS TO CERTIFY THAT FRANK P. HARTLEY interested eight large concerns in my invention on the ROAD HOG SIGN, and I am very much satisfied with the manner in which he is handling my invention. Mr. Hartley interested five of these concerns within three days, which goes to show that he is right on the job, and means business.—Signed, A. C. ERWIN, Arkansas.

The above testimonials show that our clients have been satisfied with our method of doing business. Our literature has been O. K.'d by State Attorneys.

IT WOULD TAKE A DOZEN PAGES TO HOLD ALL THE TESTIMONIALS WE HAVE RECEIVED. SPACE PREVENTS US FROM SHOWING YOU COPIES OF HUNDREDS OF LETTERS FROM HIGH RATED MANUFACTURING CONCERNS THAT HAVE WRITTEN US IN REGARD TO PURCHASING INVENTIONS IN DIFFERENT LINES OR MANUFACTURING THEM ON A ROYALTY BASIS.

Not responsible for MODELS left in our office after 15 months or in case of fire.

Eleven Reasons Why You Should Take Out One of Our Plans

No. 1—**Because** you save the thousands of dollars, and years of time we have spent getting in touch with hundreds of moneyed men and manufacturers who are looking for inventions of merit, to buy outright, or manufacture on a royalty basis.

No. 2—**Because** we have hundreds of letters here in our office from manufacturers who wish us to send them good inventions in their line.

No. 3—**Because** we have the experience and facilities necessary to enable us to present your invention for sale.

No. 4—**Because** the testimonials by inventors who we have done business with, and the references from both Bank and City Officials, speak for themselves.

No. 5—**Because** we have actually sold patented and unpatented inventions and have had thousands of dollars in cash paid over for same.

No. 6—**Because** it only takes us a few hours to get in touch with manufacturers of every line of invention.

No. 7—**Because** Bank and City Officials, and Lawyers with their clients, have called at our office and model room and convinced themselves that we do just as we agree to do with every inventor that we do business with. They have seen the hundreds of letters we have received from manufacturers who are looking for good inventions. Thousands of letters to manufacturers we have written to for inventors. A large number of letters from concerns we have interested in inventors' inventions. Dozens of testimonials from inventors. Hundreds of stubs of coupons we have sent to the Patent Office for copies of inventors' patent papers, etc.

No. 8—**Because** we have Government books showing the drawings and specifications of hundreds of thousands of patented inventions.

No. 9—**Because** we believe in earning every dollar that we receive.

No. 10—**Because** we send the inventor all answers we receive from the manufacturers we write to in regard to his invention and let him make his own terms with the manufacturer.

No. 11—**Because** we do not tie the inventor up with a contract or charge him any commission, or call on for any extra fees whatever. The inventor has a right to sell his invention himself any time without interfering with us. There is no red tape or time wasted in writing back and forth and drawing up special contracts.

There are several reasons why we cannot sell every invention that is sent to us. 1—The inventors want too much for their inventions. 2—Their inventions are infringements on prior patents. 3—They cannot be manufactured to sell at a profit. 4—There are other inventions in the same line that are already on the market that are not so complicated and are superior.

We advertise in leading papers and magazines each month. We are receiving daily letters from manufacturing concerns in regard to inventions. We have interested as high as seven manufacturers and moneyed men in one day in inventors' inventions. We are sparing no expense to make this company one of the best in the United States for the benefit of inventors. We have no high rents to pay. We employ the most competent help obtainable.

You would realize how hard it is for an inventor to sell his invention himself, if you knew that approximately only one inventor out of a thousand sells his invention himself.

We interest manufacturers and money men in approximately seventy-five per cent of the good inventions that we handle, and if we do not sell their inventions, it is not our fault, but the inventor's, for wanting too high a price for his invention.

We have had an inventor set his price at $3,000,000, on his invention when it was nor worth thirty hundred dollars. We interested a concern in an inventor's invention and then the inventor set a price of half a million dollars on it. The concern would have paid twenty thousand. The inventor still has his invention. One inventor wanted two thousand for his invention and when we got a moneyed man over to our office to buy it, the inventor jumped his price up to fourteen thousand, and he still has his invention.

We do business with a concern that has a syndicate of 4200 papers and magazines to advertise in. If we want an ad to appear in all 4200, we have only to write one letter, one ad, and use one stamped envelope. Can you imagine the immense saving this is from writing 4200 letters, using 4200 stamped envelopes, writing 4200 ads, looking up the names and addresses of 4200 concerns that publish papers and magazines? It means the saving of hundreds of dollars in time and money.

Can you imagine what 4200 paper concerns would charge you for setting up the type and running your ad in 4200 papers and magazines? The concern that we do business with, sets up the type once, and prints millions of copies of ads on one side of a double sheet and sends thousands of these sheets to the different paper concerns, who print up their local items on the other side of the paper, then slip this double sheet in between their regular sheets.

Thus you will see, that instead of the type being set up 4200 times, it is only set up once.

It would not pay you to put in three years learning the plumbing trade and buying hundreds of dollars worth of tools, just to do one fifty dollar job. Neither will it pay you to spend hundreds of dollars and years of time trying to sell your invention yourself when you can have the benefit of our years of time and thousands of dollars we spent building this business up to sell inventions.

Read Every Word of Our Literature

and Save Money

and Keep Out of Trouble

WE HAVE HELPED more inventors than any other concern in this state. Why drudge all your life for a mere pittance when one good idea handled right may be worth millions.

Don't let your invention DIE WITHOUT A STRUGGLE, after you have breathed the first air into its little lungs, and have it all dressed up. A poisoned dog will die if you let it lie down. But if you keep leading it around it may be worth a million dead dogs, and if you took it to the right people, you might be able to sell it for a good price. We have a list of over 300,000 manufacturers and buyers of every line of invention, and we have hundreds of letters from concerns that wish to buy or manufacture on a royalty basis, inventions of merit.

If the right people looking for inventions are not among the above, then it is hard to find them. It makes no difference what line of invention your invention is in, we have the names of many concerns that manufacture that certain line unless it is something out of the ordinary.

BEING A REGULAR SUBSCRIBER TO WEEKLY AND YEARLY BOOKS PRINTED BY THE GOVERNMENT, WE HAVE SECURED THE NAMES OF THOUSANDS OF CONCERNS THAT HAVE ACTUALLY BOUGHT INVENTIONS IN NEARLY EVERY LINE.

LET A CONCERN HANDLE YOUR INVENTION that has been thru the mill, one that has had several patents allowed in the United States, Canada, England and France on inventions of their own, and who has disposed of same at a high price.

Do you realize what an ADVANTAGE OUR CONSTANT ADVERTISING to find buyers for inventions means to you when you place your patent or invention in our hands to sell? We advertise in leading papers and magazines every month, that are read by thousands of manufacturers throughout the United States and Canada.

Many manufacturers will not do business direct with inventors. They realize that most inventors are poor business men and have no definite idea of what their inventions are worth. Too much valuable time would be necessary to do business with those men. That is why it is so hard for inventors to get a hearing. That is just why we can help you. In fact we have interested concerns in the very same invention that the inventor had failed to get them to look at.

No Contract to Sign **No Commission to Pay**

No contract to sign; no commission to pay.
No $50 and up to send us for Prospectus, or Commercial Appraisal and Valuation Report.

PLAN NO. 1

$20.00 is our entire fee. We will send to the Patent Office and pay for a dozen copies of your patent papers. We will write a dozen or more manufacturers in that line, or concerns that we think would be interested, enclosing a copy of your patent papers and describe all the advantages of your invention. Our letters will not be circular ones. Each will be a personal letter, for a definite purpose, that will command attention.

We will also demonstrate your invention to moneyed men and promoters who are interested in inventions, who come here to our office, and we will advertise your patent or invention for sale in the Bangor Daily News, and send you a copy of the paper. You need not set a price on your invention until we get someone interested, then you make your terms cash or royalty, or both. If we do not sell your patent or invention in three months, you will have a right to leave your model or drawings in our Model Room without further charge, another 12 months, and we will demonstrate it to every one that comes in looking for inventions of merit.

PLAN NO 2

Is the same as Plan No. 1, except instead of one paper we will list your patent or invention for sale in over one hundred newspapers that will be read by thousands of manufacturers throughout the United States and Canada, also will write forty-five letters. If you should advertise inventions for sale in these papers separately it would cost you hundreds of dollars, but our entire fee for both PLAN NO. 1 and PLAN NO. 2 COMBINED is only $50.00. If you are able, it will pay you to use this COMBINATION PLAN, for if you do not sell your invention thru this plan, you may be sure it is no use to spend more money trying to sell it. Under this plan, in case of a sale, we draw up all necessary papers free of charge, which alone is worth $50.00 to any inventor, unless he is a lawyer.

PLAN NO. 3

Is the same as Plan No. 2 except we only list your patent or invention for sale in fifty papers instead of one hundred, and only write twenty-five personal letters instead of forty-five.

DO NOT ASK US TO SELL YOUR INVENTION ON COMMISSION. We ask only a small sum to put your idea before the market. If you do not think enough of your invention to spend a few dollars for one of the above plans you had better lock it up for a dead issue, as 90% of inventors do. Then you may always think what you might have made if you had only written us and started things going.

If we had a million dollars we could not buy all the buildings in this city, nor handle all the inventions on commission. It is easier for 500 inventors to pay $20 apiece towards selling their inventions, than it is for one concern to spend $10,000 alone.

Name of Invention.....Inventor's Name .....

My Patent Number is.....Issued on.....19

Plan No. 1 Enclosed find $20 your entire fee. ☐

Plan No. 2 Enclosed find $50 your entire fee. ☐

Plan No. 3 Enclosed find $35 your entire fee. ☐

Make a cross X in the square for Plan you decide to use.

If your invention is not patented, send $5 extra, also a drawing or small photo of same.

MOST CONCERNS WILL MAKE YOU SEND ADDITIONAL FEES, amounting to more than our prices on the plans above, for Prospectuses, Valuation Reports and Commercial Appraisals, which they will tell you are absolutely necessary before they can close the sale. Don't be fooled by unscrupulous people whose real object is to get all the money they can from you. Generally speaking, these Prospectuses, etc., are worthless to people who buy inventions. Manufacturers who contemplate the purchase of a patent will have their own engineers make any investigation and reports they deem proper and will not charge the inventor for such service.

CONCERNS THAT AGREE TO SELL PATENTS ON A COMMISSION BASIS, but later on come back with the inferential statement that a sale is about to be made, but before the deal may be closed the prospective purchaser must be supplied with a Prospectus, Valuation Report, Validity Report, Commercial Appraisal, or some other such proposition, which to the majority of inventors seems reasonable, for which the inventor must advance a certain sum of money, ranging around $25 to $100, inventors that do business with such concerns, under the hopes of having their inventions sold thru them on a COMMISSION BASIS, in most cases are throwing their money away.

Generally these concerns after having the inventor's patent papers laid away for a month, sends the inventor a SPECIAL DELIVERY LETTER stating that they have found that the invention is worth twice as much as they first thought, and that a concern has deposited the money to buy it, and in order to close the deal the inventor must send from $25 to $100 for Prospectus, etc.

MR. INVENTOR: don't you believe if a manufacturer had deposited the money in the bank and the patent salesman saw that they meant business, that he (the patent salesman) would make up these Prospectuses at once, and deduct the price of them from the money when paid over for the invention? ABSOLUTELY. These concerns are not selling inventions on a commission basis, or any other basis. They are selling worthless Prospectuses, etc. BEWARE of these kind of people that you do not send them money and in a few months find out that they have left their place of business and left no future address. To be sure they will be operating in another place the next week, but it will be under another name.

We have been in this state over FORTY YEARS, and can furnish references from both City and Bank Officials in regard to inventions we have sold and to our honesty.

Remember, we are not patent attorneys or solicitors of patents. Look us up in the Maine Register.

November 9, 1934.

Mr. Art Williams,
Safety Air Transportation Co.,
Linden Hotel,
Indianapolis, Indiana.

Dear Sir:-

Replying to yours of October 30th:

I have a basic patent on the mixing of silica sand with rubber in various quantities as necessary to prevent slipping of rubber heels, rubber soles, belting, rubber hammers, or wherever rubber is used where it would be desirable to use a material that mixes perfectly with the surface. It presents a much longer wearing surface and also an adhesive quality that cannot be found in rubber alone.

I have had some very interesting experiments made with tires, but this material is not suitable for high speed work on the roads, although we come within a small percentage of giving as good results for wear as the regular tire. On slow moving cushion tires, we can furnish a much longer wearing surface and an assistance in gripping, and non-skid qualities.

Yours very truly,

CGF:AVM

CARL G. FISHER.

Incorporators

H. G. Robinson,
Inventor.

A. Williams,
Organizer.

Now Forming

An opportunity for a few capable men of finances to become officers, getting in on the ground floor of what has the earmarks of being the largest Aircraft mfgrs. Passenger and freight concern in the world.

The one deal that can replace automobiles in shorter time than cars replaced horses. Has bigger possibilities than railroads, and steamship companies.

Our executives must be Air-minded, have common sense, possess vision and be able to think fast.

Delaware Corporation to be capitalized at 10,000,000 shares. No par value.

Safety Air Transportation Co.

SATCO Mfg. Corp., Ltd.
Linden Hotel
Indianapolis, Indiana

10/30/34.

Mr Carl Fisher
Fisher Bldg
Miami Beach Fla.

Dear Mr Fisher;

Mr Mike Glenn has just mentioned something to me regarding a new changeable rubber heel - but his explanation of same was not clear enough to let me know whether I could do you any good or not on same.

So if you feel as tho' you would care to give me some details of same, I'll assure you that I would inform you whether I could be of use or not to you in this regards.

Mike is a good friend of mine and I see no reason why we can't all be the same. even if not in business.

Expecting a reply from you I remain

Yours

Mr A H Williams

"We Plan Building A 35 Passenger Boat for World Tour"

October 29th, 1934

Mr. Arthur Williams,
Linden Hotel,
Indianapolis, Ind.

Dear Mr. Williams:

I understand that you have interested yourself in the promotion of patents that have merit.

I have recently been issued a patent using a combination of silica sand mixed with rubber, which furnishes a very tough semi-skid proof material for rubber soles on shoes, rubber belting, rubber hammers and all other types of rubber surfaces where the speed is not too great.

I have had the Firestone Tire Company make a great many experiments using this silica sand in the surfaces of their tires but the high speed of the tire in contact with the ground has a tendency to stretch, of course, and loosen these particles of silica.

However, with this disadvantage of high speed, the silica substance gave rather good results and may yet work out satisfactorily in slow-speed solid tires.

If you think you might be interested, I can give you further particulars. However, I do not care to advance any cash, do any promotion work, or any other work in connection with the proposed sale of these patent rights.

Yours very truly,

CGF/vhs

CARL G. FISHER

LIST OF PERMITS ISSUED DURING 1935 FOR SIGNS IN MIAMI BEACH

			Cost
January			
Bronart's U-Drive-It Lot	651 5 th Street		300.00
H & V Coffee Shop	5th & Washington		50.00
The Park Ave Restaurant	22nd & Park Av		400.00
Ecomomy Bar	716 Collins Av	)	
Freddie's Bar		)	1,000.00
Paddock Bar	8th & Washington	)	
T N T Stand	5th & Alton Road		500.00
Dade Motors	5th & Washington	2 signs	300.00
Open Door Restaurant	23rd Street		100.00
Glenn Logan	22nd & Collins		100.00
Spanish Village Pharmacy	1446 Washington av.		100.00
William Penn Beauty Shop	722 Washington Ave.		100.00
Lum Joy Restaurant	Espanola & Washington		100.00
Nelson's Dept. Store	2220 Collins Ave.		100.00
Archambo Apts.	Euclid & Lincoln Rd		100.00
Bedow & Walton	208 23rd Street		100.00
Espanola Drug Co.	1444 Drexel Avenue		100.00
Bon Air Hotel	1060 Ocean Drive		100.00
Liggett Drug Co.	500 Collins Ave.		100.00
Miami Beach Fruit Shippers	603 Washington ave.		100.00
Malone Properties	2207 Collins Ave.		100.00
Indian Queen Hotel	3475 Indian Creek Drive		100.00
P. T Nickerson	343 Lincoln Road		100.00
Liggett Drug Co.	1100 Lincoln Road		100.00
Sinclair Refining Co.	23rd & Liberty Ave.		100.00
Five O'Clock Club	2217 Collins Ave.		100.00
Hildreth's Grill	743 Washington av		100.00
Blackstone Hotel	800 Washington Ave.		100.00
Minsky's Burlesque	Million Dollar Pier		100.00
Bernstein's	7 Ocean Drive		100.00
Mayflower Hotel	1702 Alton Road		100.00
February			
Olney Inn	1045 Dade Blvd.		150.00
Schiff's	618 Collins Av.		100.00
Simon's Beauty Shop	450 Collins Av		100.00
march. Liggett Drug Store	1100 Lincoln Road		800.00
Surfside Tavern	7305 Collins Ave.	(2)	600.00
Biscayne Tent & Awning	628 Collins Ave.		250.00
April			
Piper's Ice Cream Co.	5th & Euclid Ave.		200.00
Price George Hotel	5th & Michigan Ave.		200.00
May			
Ship Bar	242 23rd Street		150.00
North Beach Store	7147 Collins Ave.		700.00
June - None			
July			
Horner Corporation	7118 Collins ave		100.00
Annell Hotel	7th & Euclid avenue		1,000.00

August		
Ocean Towers	42nd & Ocean	100.00
September		
Taylor Drug Store	745 Washington Ave.	100.00
October		
Little Dutch Mill	5th & Alton Rd	500.00
Hotel Millard	936 Washington Ave.	225.00
Gulf Refining Company	Biscayne Street & Alton Rd	8,000.00
Rubin	944 Collins Avenue	200.00
Thaler Bros.	1447 Drexel Ave.	60.00
November		
National Package Store	5th & Meridian Ave. (2)	100.00
National Package Store	655 Washington Avenue	100.00
Edison Hotel	10th & Ocean Drive	100.00
Epicure Bar	Lincoln & Alton	70.00
Dr. Saalfrank	1669 Michigan Avenue	50.00
Mrs. Van Anywerp	820 Ocean Drive	50.00
Atlas Hotel	426 Meridian Avenue	100.00
Table Supply	1325 Washington Avenue	50.00
Miami Laundry	125 5th Street	100.00
National Package Store	SE cor. 5th & Meridian Ave.	40.00
Beach Harbor	1028 Collins Avenue	50.00
~~Kinkwood Garage~~	~~West Avenue~~	~~[illegible]~~
Ship Bar	240 23rd Street	150.00
Four Aces	1111 Dade Blvd.	225.00
Charley's News	1434 Washington Avenue	225.00
Simons Beauty Shop	444 Collins Avenue	50.00
J. B. Gregorie	1211 Lincoln Road	300.00
M. A. Sterns Realty Corp.	705 5th Street	50.00
Burton's Package Store	SE cor 5th & Collins ave.	350.00
Hotel Normandie	387 Ocean Drive	300.00
Baron's Restaurant	Wm. Penn Hotel	150.00
Grandes Shoe Shop	1618 Alton Road	200.00
Katy Package Store	2300 Collins Avenue	200.00
Franklin Hotel	860 Collins Avenue	100.00
Carl Weinkle	1701 Alton Road	100.00
Samets	736 Washington Avenue	100.00
Curleys	359 Ocean Drive	100.00
BettysRestaurant & Bar	524 Collins Avenue	100.00
Schiffs Delicatessen	618 Collins Avenue	100.00
Hulls Store	222 5th Street	50.00
St. Regis Restaurant	446 Collins Avenue	50.00
Wofford Drug Store	2401 Collins Avenue	100.00
S & L Restaurant	685 Washington Av.	100.00
Blackstone Bar	8th & Washington Av	100.00
Rosedale Restaurant	1437 Washington Av.	100.00
Sanitary Fish Market	1331 Washington Av.	50.00
El Paso Hotel Inc.	928 5th Street	50.00
Goldstein's Restaurant	645 Collins Avenue	50.00
Tropical Bar	616 Collins Avenue	50.00
Oasis	8th & Washington Av	50.00
Parisian Cleaners	220 14th Street	50.00

November - continued

Otis J. Holland	1662	Alton Road	50.00
Casey's Oasis	821	Washington Av.	100.00
Edison Hotel	10th	& Ocean Drive	60.00
Little Dutch Mill	5th	& Alton Road	50.00
Habana Apt. Hotel	1308	Drexel Avenue	15.00

December

Postal Telegraph Co.	705	5th Street	100.00
A. C. Bennett Hardware Store	621	Washington Ave.	50.00
Fenner & Beane	1091	Lincoln Road.	50.00
Little Sam's	747	Washington Avenue	150.00
Fred Gurtner	751	Washington Avenue	150.00
Dade Motor Sales Co.	626	5th Street	15.00
Dade Motor Sales Co.	430	Washington Avenue	20.00
Beach Park Hotel	600	Ocean Drive	50.00
A. J Sporborg	1630	Lenox Avenue	150.00
Roy's	1675	Alton Road	100.00
Fortune Tango		Hardie's Casino	275.00
Washington Ave Drug Store	Washington &	5th	200.00
23rd St. Realty Co.	2243	Collins Avenue	50.00
Wagner Brewing Company	18	Collins Av,(Lantern Inn)	100.00
H. Read	1657	Washington Av	40.00
Surfside Hotel	2457	Collins Avenue	50.00
Luxton Apt. Hotel	757	Washington Ave.	50.00
Gellis Restaurant	601	Washington Avenue	10.00
Dixie Tavern Inc.	1st	& Ocean Drive	200.00
Seiden's Restaurant	10th	& Ocean Drive (6)	200.00
Espanola Drug Co.	1444	Drexel Avenue	50.00
Jerry Salvatore	607	Collins Avenue	50.00
Halleman's Grille	14th	& Washington	300.00
Halleman's Grille	14th	& Washington	150.00
C L. Goodridge	1626	Lenox avenue	100.00
Schwartz Restaurant	1333	6th Street	10.00
Miller & Mundy	702	5th Street	100.00
Hotel Evans	10th	& Collins Avenue	40.00
El Mirasol	27th	& Collins Avenue	100.00
Joe's Restaurant	Biscayne & Washington		50.00
Riley's Market	1431	Washington Avenue	30.00
Farr Tours	527	Collins Avenue	50.00
Brass Rail Coffee Shop	320	23rd Street	200.00
Sun Hoy Restaurant	217	5th Street	200.00
Embassy Hotel	30th	& Collins Avenue	300.00
Jewish Restaurant	446	Collins Avenue	100.00
Hotel Good	43rd	& Collins Avenue	50.00
John C. Frazure	833	Lincoln Road	50.00
Breeding Drug Store	23rd	& Collins Avenue	200.00
Empire Hotel	9th	& Collins Avenue	200.00
F. L. Haines	400	Lincoln Road	100.00
Lee Pharmacy	8th	& Washington	400.00
Nelson's 5 & 10	221	5th Street	300.00
Chicago Restaurant	451	Collins Avenue	150.00
Rarada Hotel		Euclid Avenue	50.00
Buck Grundy's		23rd Street	125.00
Taylor's Drug Company	745	Washington Avenue	50.00
Walker-Skagseth Inc.	1675	Alton Road	485.00
Bon Air Hotel	1060	Ocean Drive	225.00
Faunces Ice Cream Co.	SE cor 5th & Collins av.		300.00

December - continued

Williamson Rent-A-Car Co.	Jefferson Av & 5th Street	100.00
Princess Ann Hotel	920 Collins Avenue	150.00
Hertz U-Drive-It	Euclid & 5th	50.00
Paddock Bar	7th & Washington	50.00
Deauville Hotel	6701 Collins avenue	50.00
Top Deck	719 5th Street	150.00
Greyhound Bar	#2 Ocean Drive	150.00
Waffle Martin	1259 Washington Avenue	200.00
Tomac	Espanola & Washington	100.00
Model Laundry	1626 Michigan Avenue	125.00
Five O'Clock Club	2218 Collins Avenue	50.00
Beck's Garage	1132 15th Street	150.00
Nash Hotel	1120 Collins Avenue	150.00
Feiner's Realtors	1053 Washington Avenue	400.00
	Total -	$31,470.00

STATE OF FLORIDA
OFFICE
SECRETARY OF STATE

Certificate Designating Place of Business or Domicile for the Service of Process within this State, Naming Agent upon Whom Process may be Served and Names and Addresses of the Officers and Directors

In pursuance of Chapter 11829, Laws of Florida, 1927 Session, the following is submitted, in compliance with said Act:

First—That .....

a corporation duly organized and existing under the laws of the State of .....

with its principal place of business at City of .....

County of ....., State of .....

has designated and established .....
(Street or Building)

City of ....., County of .....

State of ....., as its place of business or domicile for the service of

process within this State, and named as its agents .....

..... to accept service of process.

OFFICERS:

NAME	SPECIFIC ADDRESS

DIRECTORS:

NAME	SPECIFIC ADDRESS

By .....

Having been named to accept service of process for the above stated corporation, at place designated in this certificate, I hereby accept to act in this capacity, and agree to comply with the provisions of said Act relative to keeping open said office.

.....

The above Act requires each and every corporation now organized and existing under the laws of the State, or which may hereafter be organized under the laws of the State, and each and every Foreign Corporation which has heretofore or may hereafter qualify under the law to transact business within the limits of the State of Florida, to designate a place of business or domicile for the service of process within this State, and name an agent to accept service of process. (This Act does not apply to: Banking Companies, Trust Companies, Insurance Companies of any kind, Safety Deposit Companies, Building and Loan Associations, Express and Railroad Companies, Telephone and Telegraph Companies, Sleeping Car Companies, Canal Companies, Co-operative Associations, Cemetery Companies, State Fairs or Expositions, Fraternal Benefit Societies and Corporations not for profit).

☞ It is only necessary to file this certificate within thirty days after filing Certificate of Incorporation, as to domestic Corporations, and within thirty days after issuance of permit to foreign corporations; and thereafter only, when corporation has changed its place of business or agent.

2-22-35 W.M

CERTIFICATE OF INCORPORATION

OF

KEEN SIGN CO. INC.

We, the undersigned, desiring to form a corporation under the provisions of Chapter 10096, Acts of the Legislature of the State of Florida, 1925, and all Acts amendatory thereto, hereby make, subscribe and acknowledge before a Notary Public and file with the Secretary of State of the State of Florida, a Certificate of Incorporation, as follows:

I.

The name of the proposed corporation shall be: "KEEN SIGN CO. INC."

II.

The general nature of the business or businesses to be transacted by said corporation shall be to do any or all of the things herein mentioned as fully and to the same extent as natural persons might or could do, and in any part of the world, viz:

1. Directly, and/or through ownership of stock in any corporation, to purchase, lease, hire, or otherwise acquire, to hold, own, exchange, maintain, improve, lease, sell, convey or otherwise dispose of, real estate, either improved or unimproved, and personal property, and any interest or right therein, in or out of this State and in any other place or places in the several States and Territories of the United States, the District of Columbia, Colonial possessions and territorial acquisitions of the United States, and in foreign countries, as shall be found necessary and convenient from time to time for the lawful purposes of the corporation.

2. To erect, construct, maintain, improve, rebuild, and enlarge, alter, manage, and control, directly, and/or through the ownership of stock in any corporation, any and all kinds of buildings, houses, hotels, stores, offices, wharves, piers, mills, shops, factories, and any and all other structures which may at any time be necessary, useful or advantageous for the purposes of the corporation.

3. To create, purchase, acquire, hold, use, sell, assign, lease, grant licenses in respect of, mortgage, or otherwise dispose of, directly, and/or through ownership of stock in any corporation, letters patent of the United States or any foreign country, patent rights, licenses and privileges, inventions, improvements, and processes, copyrights, trade marks and trade names.

4. Directly, and/or through ownership of stock in any corporation, to conduct a general advertising business, both as principals and agents, including the preparation and arrangement of advertisements, and the manufacture and construction of advertising devices and novelties.

5. Directly, and/or through ownership of stock in any corporation, to erect, construct, purchase, lease, or otherwise acquire fences, billboards, signboards, buildings, and other structures suitable for advertising purposes, and to display movable or changeable signs, cards, pictures, designs, mottoes, and other devices operated by clockwork, electricity, or other power.

6. Directly, and/or through ownership of stock in any corporation, to carry on the business of electricians, mechanics, engineers, and manufacturers, workers and dealers in electricity, motive power and light, and any business in which the application of electricity or any light power or any powerthat can be used as a substitute therefor or which may be useful, convenient or ornamental, or any other business of a like nature;

7. Directly, and/or through ownership of stock in any corporation, to manufacture, store, sell, deliver and distribute electricity for light, heat, power and for all such other chemical and mechanical purposes as electricity can be applied to, either now or in the future, and to manufacture and sell all kinds of electric appliances,apparatus and supplies.

8. To borrow money and contract debts when necessary for the transaction of its business or for the exercise of its corporate rights, privileges, or franchises, or for any other lawful purpose of its incorporation; to issue bonds, promissory notes, bills of exchange, debentures, and other obligations and evidences of indebtedness payable at a specified time or times, or payable upon the happening of a specified event or events, whether secured by mortgage, pledge, or otherwise, or unsecured, for money borrowed or in payment for property purchased or acquired or any other lawful objects.

9. To guarantee, purchase, hold, sell, assign, transfer, mortgage, pledge, or otherwise dispose of the shares of the capital stock of, or any bonds, securities, or evidences of indebtedness created by any other corporation or corporations of this state or any other state or government, and while owner of such stock to exercise all the rights, powers and privileges of ownership, including the right to vote thereon.

10. To purchase, hold, sell, and to transfer, shares of its own capital stock; subject however, to such limitations as may be provided by law; and provided further that shares of its own capital stock owned by the corporation shall not be voted upon directly or indirectly, nor counted as outstanding for the purpose of any stockholders' quorum or vote.

3. To create, purchase, acquire, hold, use, sell, assign, lease, grant licenses in respect of, mortgage, or otherwise dispose of, directly, and/or through ownership of stock in any corporation, letters patent of the United States or any foreign country, patent rights, licenses and privileges, inventions, improvements, and processes, copyrights, trade marks and trade names.

4. Directly, and/or through ownership of stock in any corporation, to conduct a general advertising business, both as principals and agents, including the preparation and arrangement of advertisements, and the manufacture and construction of advertising devices and novelties.

5. Directly, and/or through ownership of stock in any corporation, to erect, construct, purchase, lease, or otherwise acquire fences, billboards, signboards, buildings, and other structures suitable for advertising purposes, and to display movable or changeable signs, cards, pictures, designs, mottoes, and other devices operated by clockwork, electricity, or other power.

6. Directly, and/or through ownership of stock in any corporation, to carry on the business of electricians, mechanics, engineers, and manufacturers, workers and dealers in electricity, motive power and light, and any business in which the application of electricity or any light power or any powerthat can be used as a substitute therefor or which may be useful, convenient or ornamental, or any other business of a like nature;

7. Directly, and/or through ownership of stock in any corporation, to manufacture, store, sell, deliver and distribute electricity for light, heat, power and for all such other chemical and mechanical purposes as electricity can be applied to, either now or in the future, and to manufacture and sell all kinds of electric appliances,apparatus and supplies.

8. To borrow money and contract debts when necessary for the transaction of its business or for the exercise of its corporate rights, privileges, or franchises, or for any other lawful purpose of its incorporation; to issue bonds, promissory notes, bills of exchange, debentures, and other obligations and evidences of indebtedness payable at a specified time or times, or payable upon the happening of a specified event or events, whether secured by mortgage, pledge, or otherwise, or unsecured, for money borrowed or in payment for property purchased or acquired or any other lawful objects.

9. To guarantee, purchase, hold, sell, assign, transfer, mortgage, pledge, or otherwise dispose of the shares of the capital stock of, or any bonds, securities, or evidences of indebtedness created by any other corporation or corporations of this state or any other state or government, and while owner of such stock to exercise all the rights, powers and privileges of ownership, including the right to vote thereon.

10. To purchase, hold, sell, and to transfer, shares of its own capital stock; subject however, to such limitations as may be provided by law; and provided further that shares of its own capital stock owned by the corporation shall not be voted upon directly or indirectly, nor counted as outstanding for the purpose of any stockholders' quorum or vote.

11. To subscribe for, purchase or otherwise acquire, and to sell, exchange, pledge or otherwise dispose of and deal with bonds, debentures, notes and other securities issued by any governmental, state, county or other public authority or by any one or more persons, firms or corporations, and to guarantee and become surety with respect to the same and any obligations therein contained.

12. To offer for public or private subscription the securities, including stock, bonds or other obligations which the corporation is authorized to acquire, and otherwise to establish, promote and aid in establishing and promoting any corporation, association, undertaking or public or private body.

13. To aid in any manner any corporation, association or individual, of which any bonds or other securities or evidence of indebtedness, or stock, are held by this corporation, and to do any act or thing designed to protect, preserve, improve or enhance the value of any securities, or other property in which this corporation is interested, financially or otherwise.

14. To purchase or otherwise acquire, directly, and/or through ownership of stock in any corporation, all or any part of the business, good-will, rights, property, and assets of all kinds, of any corporation, association, partnership, or individual, and to pay for the same in cash, with the stock of this corporation, bonds or otherwise, and to hold, or in any manner dispose of the whole or any part of the property so purchased; and to conduct in any lawful manner the whole or any part of the business so acquired, provided such business is within the authorization of the said Acts of the Legislature of the State of Florida, 1925, and any Acts amendatory thereto, and to exercise all the powers necessary or convenient in or about the conducting and management of such business.

Without in any particular limiting any of the objects and powers of the corporation, it is expressly declared and provided that the corporation shall have power in carrying on its business, or for the purpose of the accomplishment of any of the purposes or attainment of any of the objects hereinabove mentioned, to make and perform contracts of any kind and description and to do any and all other acts and things and to exercise any and all other powers which a copartnership or natural persons could do and exercise, and which now or hereafter may be authorized by law. But it is expressly provided that nothing in this certificate contained shall confer upon the corporation any power requiring the exercise of the right of eminent domain.

11. To subscribe for, purchase or otherwise acquire, and to sell, exchange, pledge or otherwise dispose of and deal with bonds, debentures, notes and other securities issued by any governmental, state, county or other public authority or by any one or more persons, firms or corporations, and to guarantee and become surety with respect to the same and any obligations therein contained.

12. To offer for public or private subscription the securities, including stock, bonds or other obligations which the corporation is authorized to acquire, and otherwise to establish, promote and aid in establishing and promoting any corporation, association, undertaking or public or private body.

13. To aid in any manner any corporation, association or individual, of which any bonds or other securities or evidence of indebtedness, or stock, are held by this corporation, and to do any act or thing designed to protect, preserve, improve or enhance the value of any securities, or other property in which this corporation is interested, financially or otherwise.

14. To purchase or otherwise acquire, directly, and/or through ownership of stock in any corporation, all or any part of the business, good-will, rights, property, and assets of all kinds, of any corporation, association, partnership, or individual, and to pay for the same in cash, with the stock of this corporation, bonds or otherwise, and to hold, or in any manner dispose of the whole or any part of the property so purchased; and to conduct in any lawful manner the whole or any part of the business so acquired, provided such business is within the authorization of the said Acts of the Legislature of the State of Florida, 1925, and any Acts amendatory thereto, and to exercise all the powers necessary or convenient in or about the conducting and management of such business.

Without in any particular limiting any of the objects and powers of the corporation, it is expressly declared and provided that the corporation shall have power in carrying on its business, or for the purpose of the accomplishment of any of the purposes or attainment of any of the objects hereinabove mentioned, to make and perform contracts of any kind and description and to do any and all other acts and things and to exercise any and all other powers which a copartnership or natural persons could do and exercise, and which now or hereafter may be authorized by law. But it is expressly provided that nothing in this certificate contained shall confer upon the corporation any power requiring the exercise of the right of eminent domain.

11. To subscribe for, purchase or otherwise acquire, and to sell, exchange, pledge or otherwise dispose of and deal with bonds, debentures, notes and other securities issued by any governmental, state, county or other public authority or by any one or more persons, firms or corporations, and to guarantee and become surety with respect to the same and any obligations therein contained.

12. To offer for public or private subscription the securities, including stock, bonds or other obligations which the corporation is authorized to acquire, and otherwise to establish, promote and aid in establishing and promoting any corporation, association, undertaking or public or private body.

13. To aid in any manner any corporation, association or individual, of which any bonds or other securities or evidence of indebtedness, or stock, are held by this corporation, and to do any act or thing designed to protect, preserve, improve or enhance the value of any securities, or other property in which this corporation is interested, financially or otherwise.

14. To purchase or otherwise acquire, directly, and/or through ownership of stock in any corporation, all or any part of the business, good-will, rights, property, and assets of all kinds, of any corporation, association, partnership, or individual, and to pay for the same in cash, with the stock of this corporation, bonds or otherwise, and to hold, or in any manner dispose of the whole or any part of the property so purchased; and to conduct in any lawful manner the whole or any part of the business so acquired, provided such business is within the authorization of the said Acts of the Legislature of the State of Florida, 1925, and any Acts amendatory thereto, and to exercise all the powers necessary or convenient in or about the conducting and management of such business.

Without in any particular limiting any of the objects and powers of the corporation, it is expressly declared and provided that the corporation shall have power in carrying on its business, or for the purpose of the accomplishment of any of the purposes or attainment of any of the objects hereinabove mentioned, to make and perform contracts of any kind and description and to do any and all other acts and things and to exercise any and all other powers which a copartnership or natural persons could do and exercise, and which now or hereafter may be authorized by law. But it is expressly provided that nothing in this certificate contained shall confer upon the corporation any power requiring the exercise of the right of eminent domain.

III.

The maximum number of shares of stock outstanding at any one time shall be One Hundred (100) Shares of Common Stock of the par value of One Hundred Dollars ($100.00) per share.

IV.

The corporation will begin business with the sum of Five Hundred Dollars ($500.00) capital.

V.

The corporation is to have perpetual existence.

VI.

The principal office or place of business of the corporation shall be located in the City of Miami Beach, Dade County, Florida.

VII.

The number of Directors shall be Five (5).

VIII.

The names and post office addresses of the first Board of Directors are as follows:

Name:	Post Office Address:	
Fred E. Zurwelle	1545 Michigan Avenue,	Miami Beach, Florida
George M. Whittaker	1359 Southwest 1st Street,	Miami, Florida
C. McLaughlin	215 Northeast 33rd Street,	Miami, Florida
Wilbur D. Davidson	4220 Prairie Avenue,	Miami Beach, Florida
Wm. W. Muir	1633 Jefferson Avenue,	Miami Beach, Florida.

All of said Directors are of full age and at least one of them is a citizen of the United States.

IX.

The name and post office address of each subscriber of this certificate of incorporation and the number of shares of stock which he agrees to take, are as follows:

Name:	Post Office Address:	No. of Shares:
Fred E. Zurwelle,	1543 Michigan Avenue, Miami Beach, Fla.	1
George M. Whittaker,	1359 Southwest 1st St. Miami, Fla.	1
Wm. W. Muir,	1633 Jefferson Ave., Miami Beach, Fla.	1

IN WITNESS WHEREOF, we have hereunto set our hands and seals, this _____ day of February, 1935.

_____ (SEAL)

_____ (SEAL)

_____ (SEAL)

STATE OF FLORIDA)
COUNTY OF DADE) SS

Before me, the undersigned authority, a Notary Public for the State of Florida at large, this day personally appeared FRED E. ZURWELLE, GEORGE M. WHITTAKER, and WM. W. MUIR, each to me well known and well known to me to be the identical individual described in and who executed the foregoing proposed Certificate of Incorporation of KEEN SIGN CO. INC., and they each acknowledged before me that they signed and executed the same for the purposes therein set forth.

IN WITNESS WHEREOF, I have hereunto set my hand and affixed my official seal at Miami Beach, in said County and State, this _____ day of February, 1935.

_____
Notary Public State of Florida at Large

My commission expires:

_____

IX.

The name and post office address of each subscriber of this certificate of incorporation and the number of shares of stock which he agrees to take, are as follows:

Name:	Post Office Address:	No. of Shares:
Fred E. Zurwelle,	1543 Michigan Avenue, Miami Beach, Fla.	1
George M. Whittaker,	1359 Southwest 1st St. Miami, Fla.	1
Wm. W. Muir,	1633 Jefferson Ave., Miami Beach, Fla.	1

IN WITNESS WHEREOF, we have hereunto set our hands and seals, this _____ day of February, 1935.

_____ (SEAL)

_____ (SEAL)

_____ (SEAL)

STATE OF FLORIDA }
COUNTY OF DADE } SS

Before me, the undersigned authority, a Notary Public for the State of Florida at large, this day personally appeared FRED E. ZURWELLE, GEORGE M. WHITTAKER, and WM. W. MUIR, each to me well known and well known to me to be the identical individual described in and who executed the foregoing proposed Certificate of Incorporation of KEEN SIGN CO. INC., and they each acknowledged before me that they signed and executed the same for the purposes therein set forth.

IN WITNESS WHEREOF, I have hereunto set my hand and affixed my official seal at Miami Beach, in said County and State, this _____ day of February, 1935.

_____
Notary Public State of Florida at Large

My commission expires:

_____

To be
ck & Bal file

WILLIAM W. MUIR
ATTORNEY AT LAW
846 LINCOLN ROAD
MIAMI BEACH, FLORIDA

February 23,1935

Mr. Carl G. Fisher
Miami Beach
Florida.

file

Dear Mr. Fisher:

Attached is an executed copy of a Certificate of Incorporation of KEEN SIGN CO. INC., to be organized under the laws of Florida, with a capital stock of One Hundred Shares of the par value of $100.00 each. The corporation is to have five (5) directors and is authorized to engage in the advertising and sign business.

This Certificate should be mailed to Mr. R. A. Gray, Secretary of State, Tallahassee, Florida, with a check for $28.00, to cover -

Filing Certificate	$ 5.00
Charter tax for 100 shares, $100.00 par value stock	20.00
Certified copy of Certificate. .	3.00
	$ 28.00

Check. #9258 paid
OK
C.G.F.

There is also attached a Petition for Letters Patent and Oath; also Specification, and a drawing.

The Specification is a very rough draft and can be used only as a working basis. Since drafting the Specification, the drawing has been changed in certain particulars, including the addition of Figures C and D. Figure C is a single unit, complete in itself as to construction, electric or mechanical light control, with removable and replaceable slides; Figure D is an assembly of three Figure C units.

Yours very truly

Wm. W. Muir

WM.W.MUIR.

Attach.

FEB 27, 1935

C

OFFICE OF SECRETARY OF STATE

Tallahassee, Fla., Feby 27 1935, 193

RECEIVED from Hon. William W. Muir

the sum of Twenty eight and no/100 ------ Dollars

For the following:

Charter tax of KEEN SIGN CO. INC	$20. 00
Filing Certificate of Incorporation	5. 00
Certified copy	3. 00

$ 28. 00

R. A. Gray

Secretary of State.

THIS MONEY PAID INTO THE STATE TREASURY

All receipts issued and papers filed subject to clearing and final payment of remittance check

Office of the
Secretary of State
State of Florida
Tallahassee

R. A. GRAY
SECRETARY OF STATE

February 27th 1935

Hon. William W. Muir
846 Lincoln Road
Miami Beach, Florida

Dear Mr. Muir:

I am in receipt of Certificate of Incorporation of KEEN SIGN CO. INC., and check for $28.00 and said Certificate has been on February 27th 1935 duly filed in this office according to law.

I am enclosing receipt showing items in payment of which the amount received has been used, together with certified copy of the Certificate.

Cordially yours,

R. A. Gray

Secretary of State

/ec
Enc

CERTIFICATE OF INCORPORATION

OF

KEEN SIGN CO. INC.

We, the undersigned, desiring to form a corporation under the provisions of Chapter 10096, Acts of the Legislature of the State of Florida, 1925, and all Acts amendatory thereto, hereby make, subscribe and acknowledge before a Notary Public and file with the Secretary of State of the State of Florida, a Certificate of Incorporation, as follows:

I.

The name of the proposed corporation shall be:

"KEEN SIGN CO. INC."

II.

The general nature of the business or businesses to be transacted by said corporation shall be to do any or all of the things herein mentioned as fully and to the same extent as natural persons might or could do, and in any part of the world, viz:

1. Directly and/or through ownership of stock in any corporation, to purchase, lease, hire, or otherwise acquire, to hold, own, exchange, maintain, improve, lease, sell, convey, or otherwise dispose of, real estate, either improved or unimproved and personal property, and any interest or right therein, in or out of this State and in any other place or places in the several States and Territories of the United States, the District of Columbia, Colonial possessions and territorial acquisitions of the United States, and in foreign countries, as shall be found necessary and convenient from time to time for the lawful purposes of the corporation.

2. To erect, construct, maintain, improve, rebuild, and enlarge, alter, manage, and control, directly and/or through the ownership of stock in any corporation, any and all kinds of buildings, houses, hotels, stores, offices, wharves, piers, mills, shops, factories, and any and all other structures which may at any time be necessary, useful or advantageous for the purposes of the corporation.

3. To erect, purchase, acquire, hold, use, sell, assign, lease, grant licenses in respect of, mortgage or otherwise dispose of, directly and/or through ownership of stock in any corporation, letters patent of the United States or any foreign country, patent rights, licenses and privileges, inventions, improvements, and processes, copyrights, trade marks and trade names.

4. Directly and/or through ownership of stock in any corporation, to conduct a general advertising business, both as principals and agents, including the preparation and arrangement of advertisements, and the manufacture and construction of advertising devices and novelties.

5. Directly and/or through ownership of stock in any corporation, to erect, construct, purchase, lease or otherwise acquire fences, billboards, signboards, buildings, and other structures suitable for advertising purposes, and to display movable or changeable signs, cards, pictures, designs, mottoes, and other devices operated by clockwork, electricity or other power.

6. Directly and/or through ownership of stock in any corporation, to carry on the business of electricians, mechanics, engineers, and manufacturers, workers and dealers in electricity, motive power and light, and any business in which the application of electricity or any light power or any power that can be used as a substitute therefor or which may be useful, convenient or ornamental or any other business of a like nature;

7. Directly and/or through ownership of stock in any corporation to manufacture, store, sell, deliver and distribute electricity for light, heat, power and for all such other chemical and mechanical purposes as electricity can be applied to, either now or in the future, and to manufacture and sell all kinds of electric appliances, apparatus and supplies.

8. To borrow money and contract debts when necessary for the transaction of its business or for the exercise of its corporate rights, privileges or franchises, or for any other lawful purpose of its incorporation; to issue bonds, promissory notes, bills of exchange, debentures, and other obligations and evidences of indebtedness payable at a specified time or times, or payable upon the happening of a specified event or events, whether secured by mortgage, pledge or otherwise, or unsecured for money borrowed or in payment for property purchased or acquired or any other lawful objects.

9. To guarantee, purchase, hold, sell, assign, transfer, mortgage, pledge, or otherwise dispose of the shares of the capital stock of, or any bonds, securities, or evidences of indebtedness created by any other corporation or corporations of this State or any other State or Government, and while owner of such stock to exercise all the rights, powers and privileges of ownership, including the right to vote thereon.

10. To purchase, hold, sell, and to transfer, shares of its own capital stock; subject however to such limitations as may be provided by law; and provided further that shares of its own capital stock owned by the corporation shall not be voted upon directly or indirectly, or counted as outstanding for the purpose of any stockholders' quorum or vote.

11. To subscribe for, purchase or otherwise acquire, and to sell, exchange, pledge, or otherwise dispose of and deal with bonds, debentures, notes and other securities issued by any governmental, state, county, or other public authority or by any one

or more persons, firms or corporations, and to guarantee and become surety with respect to the same and any obligations therein contained.

12. To offer for public or private subscription the securities, including stock, bonds or other obligations which the corporation is authorized to acquire, and otherwise to establish, promote and aid in establishing and promoting any corporation, association, undertaking or public or private body.

13. To aid in any manner any corporation, association or individual, of which any bonds or other securities or evidence of indebtedness, or stock are held by this corporation, and to do any act or thing designed to protect, preserve, improve or enhance the value of any securities, or other property in which this corporation is interested, financially or otherwise.

14. To purchase or otherwise acquire, directly, and/or through ownership of stock in any corporation, all or any part of the business, good-will, rights, property, and assets of all kinds, of any corporation, association, partnership or individual, and to pay for the same in cash, with the stock of this corporation, bonds or otherwise and to hold, or in any manner dispose of the whole or any part of the property so purchased; and to conduct in any lawful manner the whole or any part of the business so acquired, provided such business is within the authorization of the said Acts of the Legislature of the State of Florida, 1925, and any Acts amendatory thereto, and to exercise all the powers necessary or convenient in or about the conducting and management of such business.

Without in any particular limiting any of the objects and powers of the corporation, it is expressly declared and provided that the corporation shall have power in carrying on its business, or for the purpose of the accomplishment of any of the purposes or attainment of any of the objects hereinabove mentioned, to make and perform contracts of any kind and description and to do any and all other acts and things and to exercise any and all other

powers which a copartnership or natural persons could do and exercise, and which now or hereafter may be authorized by law. But it is expressly provided that nothing in this Certificate contained shall confer upon the corporation any power requiring the exercise of the right of eminent domain.

III.

The maximum number of shares of stock outstanding at any one time shall be One Hundred (100) shares of Common Stock of the par value of One Hundred Dollars ($100.00) per share.

IV.

The corporation will begin business with the sum of Five Hundred Dollars ($500.00) capital.

V.

The corporation is to have perpetual existence.

VI.

The principal office or place of business of the corporation shall be located in the City of Miami Beach, Dade County, Florida.

VII.

The number of Directors shall be five (5).

VIII.

The names and post office addresses of the first Board of Directors are as follows:

NAME	POST OFFICE ADDRESS	
Fred E. Zurwelle	1543 Michigan Avenue	Miami Beach, Florida
George M. Whittaker	1359 Southwest 1st Street	Miami, Florida
C. McLaughlin	215 Northeast 33rd Street	Miami, Florida
Wilbur D. Davidson	4220 Prairie Avenue	Miami Beach, Florida
Wm. W. Muir	1633 Jefferson Avenue	Miami Beach, Florida

All of said Directors are of full age and at least one of them is a citizen of the United States.

IX.

The name and post office address of each subscriber of this Certificate of Incorporation and the number of shares of stock which he agrees to take, are as follows:

NAME	POST OFFICE ADDRESS	NO. OF SHARES
Fred E. Zurwelle	1543 Michigan Avenue, Miami Beach, Fla.	1
George M.Whittaker	1359 Southwest 1st St., Miami, Fla.	1
Wm. W. Muir	1633 Jefferson Ave., Miami Beach, Fla.	1

IN WITNESS WHEREOF, we have hereunto set our hands and seals this 23rd day of February 1935.

Fred E. Zurwelle (Seal)
George M. Whittaker (Seal)
Wm. W. Muir (Seal)

STATE OF FLORIDA
SS
COUNTY OF DADE

Before me, the undersigned authority, a Notary Public for the State of Florida at large, this day personally appeared Fred E. Zurwelle, George M.Whittaker, and Wm. W. Muir, each to me well known and well known to me to be the identical individual described in and who executed the foregoing proposed Certificate of Incorporation of KEEN SIGN CO. INC., and they each acknowledged before me that they signed and executed the same for the purposes therein set forth.

IN WITNESS WHEREOF, I have hereunto set my hand and affixed my official seal at Miami Beach, in said County and State, this 23rd day of February 1935.

Evelyn Ellis
Notary Public, State of Florida at large
My commission expires July 10, 1938

(SEAL)

State of Florida

Office of Secretary of State.

I, R. A. Gray, Secretary of State of the State of Florida, do hereby certify that the above and foregoing is a true and correct copy of Certificate of Incorporation of KEEN SIGN CO. INC., a corporation organized and existing under the laws of the State of Florida, as filed in this office on February 27th 1935.

Given under my hand and the Great Seal of the State of Florida at Tallahassee, the Capital, this the 27th day of February A. D. 1935

R. A. Gray
Secretary of State

March 1, 1935

Keen Sign Co. Inc.
Miami Beach, Florida.

Gentlemen:

I resign as Director of Keen Sign Co.Inc., my resignation to take effect immediately.

Yours very truly,

Wilbur D Davidson

March 1,1935

Keen Sign Co. Inc.,
Miami Beach
Florida.

Gentlemen:

I resign as Director of Keen Sign Co.Inc., my resignation to take effect immediately.

Yours very truly,

C McLaughlin

March 1, 1935

Keen Sign Co. Inc.
Miami Beach
Florida.

Gentlemen:

I resign as Director of KEEN SIGN CO. INC., my resignation to take effect immediately.

Yours very truly

Wm. V. Ellis

11

March 1, 1935

Keen Sign Co. Inc.,
Miami Beach, Florida.

Gentlemen:

I resign as Director of Keen Sign Co.Inc., my resignation to take effect immediately.

Yours very truly,

George M. Wilcher

3

March 1, 1935

Keen Sign Co.,
Miami Beach,
Florida.

Gentlemen:

I resign as Director of Keen Sign Co.Inc., my resignation to take effect immediately.

Yours very truly,

Fred E Gurwell

For value received, we severally sell, assign, transfer, and set over unto CARL G. FISHER, his executors, administrators and assigns, our subscriptions for One Share each of the Capital Stock of KEEN SIGN CO. INC., contained in the Certificate of Incorporation of said corporation.

WITNESS our hands and seals this first day of March, 1935.

Fred E. Gurwell

George M. McPeeler

Max W. Miller

MIAMI BEACH BAY SHORE CO.

MEMO TO MR. CARL G. FISHER DATE March 1, 1935

FROM WM.W.MUIR SUBJECT Keen Sign Co.Inc.

Keen Sign Co. Inc., has been duly organized under the laws of Florida, and there is attached a certified copy of the Certificate of Incorporation of this corporation.

There are also attached the resignations of Zurwelle, Whittaker, McLaughlin, Davidson and Muir as Directors of the corporation, and an assignment to you from Zurwelle, Whittaker and Muir of their subscriptions for one share each of the stock of the corporation.

You may now elect your permanent Board of Directors and issue the stock of the corporation after proper resolutions have been adopted.

Please let me know if you wish me to draw up the organization meeting and the by-laws of the company.

Wm W. Muir

WM.W.MUIR.

3 attachments.

Mr. Bill Muir March 8, 1935.

Mr. Carl G. Fisher. Keen Sign Co., Inc.

I have yours of the 1st, regarding the Keen Sign Company.

Everything will stand still now until we know whether our patent applications are worth while. If we are turned down on them, I don't know just what we can do. It will take at least sixty days before we know what we can do. I am advised by Hugh Davis that it will take that long to have the patent applications passed upon. In the meantime, we have protected ourselves, as far as I can see, for the future at a very nominal expense.

If we reorganize after receiving the patent, then I will do something to take care of you and Zurwelle and others on stock that may or may not be any good. At least it will not cost you any cash outlay -- and that's that.

CGF:AVM CARL G. FISHER.

H. C. SHIPMAN, M.E., B.E., NOTARY PUBLIC
REGISTERED PATENT AND TRADE MARK ATTORNEY

SPECIAL ATTENTION TO PATENT LITIGATION
ASSOCIATES IN ALL THE PRINCIPAL COUNTRIES

"The Old Reliable Firm"

HAROLD C. SHIPMAN & CO.

PATENT SOLICITORS AND COUNSELLORS
PATENTS-TRADEMARKS-DESIGNS
49-50 CARLETON CHAMBERS OPPOSITE PATENT OFFICE
OTTAWA, CANADA

April 29th, 1935.

M'r Carl G. Fisher,
Miami Beach, Fla., USA

File

In replying please
Mention file E4474

Dear Sir:-CANADIAN PATENT APPLICATIONS should be filed before MAY 31st.

During the past three months, many hundreds of corporation and individual patentees from all parts of United States have shown their appreciation of our advice in reference to the new Canadian Patent Act by filing their Canadian patent applications direct through us.

The increased industrial and commercial developments in Canada have been most noticable during the last year. We are of the opinion that there will be still greater advantageous possibilities for inventions of merit during the next year and that you should give immediate consideration to obtaining patent protection in Canada. In view of your U. S. application having been filed more than one year and the patent granted Oct. 23rd, 1934, you will not be able to obtain a valid patent in Canada after the new Act becomes law. As this has been passed by The Senate, we contemplate immediate consideration by The House of Commons when Parliment resumes on May 20th and approval completed by May 31st.

For over twenty-five years, we have been serving U. S. corporations and individual patentees. With this practical experience, our technical skill and being located opposite the Canadian Patent Office, we are in a position to give that personal attention which we feel you desire.

United States corporations and individual patentees realize their Canadian applications will be a duplicate copy of their U.S. patents and they now require technical skill in Canadian procedure. This skill your U.S. Attorney cannot give you, as he is not permitted to prosecute Canadian applications--such applications must be filed through a registered Canadian Attorney. Extra office expense may be avoided by sending applications DIRECT TO US for complete preparation and prosecution.

$25.00 is our fee for preparing and prosecuting the Canadian application, including the usual sheet of drawings and the Government filing fee. The required application documents for approval and signature will be forwarded to you on receipt of your instructions by telegram or letter, stating patent number or numbers and dates. We GUARANTEE to obtain allowance in Canada equivalent to your United States patent.

Read particulars of new Patent Act on enclosed leaflet. Immediate attention is required-Send first payment $10 by Post Office Money Order today.

Yours respectfully,

Harold Shipman

FOR PROMPT ATTENTION—If you have a Patent Office print copy of your United States patent, considerable time may be saved by forwarding same to us with instructions to prepare corresponding application for Canada. If you do not have copy on hand, do not delay by ordering one from Washington, as we are ordering them every day and can have a copy sent direct to us here.

OFFICE OF THE MAYOR
OTTAWA, CANADA

To Whom it May Concern:

Mr. Harold C. Shipman, of Harold C. Shipman & Company, has taken a prominent part in the public and business life of Ottawa for many years. He started business as a Patent Solicitor and Counsellor over twenty-five years ago and has established a widely known business among individual and corporation clients throughout Canada, United States and Foreign Countries.

In addition, Mr. Shipman has taken an interest in public affairs and for fourteen years he was elected as a member of the Board of Education of the City of Ottawa, leaving it to enter City Council, to which body he was re-elected this year for a second term.

Mr. Shipman is a public spirited business man, well known throughout the Dominion, and one whom I can highly recommend to anyone desiring the services of a reputable and experienced Patent Solicitor.

P. J. NOLAN,
Mayor.

AN ASSET WHICH CANNOT BE BOUGHT

"To have said by my fellow citizens, that I am honest and reliable. is one of the greatest assets in Life."

M

CANADIAN PATENT APPLICATIONS

Require Immediate Attention and Should Be Filed Before May 31st

To Our Many Clients throughout the United States,—

We urgently draw to your attention that, under the new Patent Act recently approved by The Senate of Canada, your Canadian patent rights may become public property. The following is a reprint of Section 26 sub-section 2 of the new Patent Act as now before our Canadian Parliament for approval.

26. (2) Any person who, before applying in Canada for a patent for an invention, shall have applied in any other country or countries for a patent or patents for the same invention shall not be entitled to obtain in Canada a patent for that invention unless his application in Canada is filed

(a) before the issue of any patent for the same invention in such other country or in any of such other countries; or

(b) within twelve months after the filing of the application, or of the first application, as the case may be, for such patent in such other country or countries.

Under this section of the new Act, a Canadian patent application may only be filed within one year from the FILING DATE or before THE ISSUE OF A PATENT in any other country. In view of your United States application having been filed over a year and the patent now issued, you will not be able to obtain a valid patent in Canada after the new Act becomes law.

We have been opposing this amendment to the Patent Act during the past few weeks when it was up for consideration before The Senate Committee, as we felt that it was unfair to our many clients throughout the United States and would be detrimental to industrial and commercial development throughout Canada. In view of the interest and expressions of certain other Canadian patent attorneys, this clause has been officially approved by The Senate and is now before the House of Commons for consideration and approval. The House of Commons has adjourned until May 20th. From information received, we are of the opinion that this new Patent Act will be taken up at an early date after Parliament resumes its session and will no doubt be approved before May 31st.

If you intend to obtain corresponding patent protection in Canada to that recently granted to you in the United States, we most sincerely recommend and urge that you give immediate consideration to the preparation and filing of the same before May 31, 1935, so that you may obtain the advantages under the old Patent Act and not leave your Canadian rights to become public property under the new Act.

N

FOR DIRECT, PERSONAL SERVICE BEFORE THE CANADIAN PATENT OFFICE AT OTTAWA, FILE YOUR PATENT APPLICATIONS THROUGH HAROLD C. SHIPMAN & CO., "THE OLD RELIABLE FIRM" OF PATENT SOLICITORS, OTTAWA, CANADA

Thoughtless Procedure

Under the new regulations of the Canadian Patent Office, United States attorneys are not permitted to file and prosecute Canadian patent applications. We find that many patentees and corporations, after being granted an United States patent, simply instruct their United States patent attorney to prepare and file the corresponding Canadian application. Applications thus prepared must be forwarded to and filed through a Registered Canadian attorney, which means duplication of office service embodying extra expense to applicants which may be avoided by sending applications direct to us for complete preparation, filing and prosecution.

Why Pay Exorbitant Fees

Your attorney in the United States has spent considerable time in studying your invention to ascertain the patentable subject matter therein and in preparing the required drawings, specifications and claims. During the prosecution of the application before the United States Patent Office, he again spent considerable time in studying any objections and references cited by the United States examiner and in preparing required amendments and arguments before the application was finally passed to allowance. For doing this work, you were paying for technical skill and ability and your United States attorney was entitled to be well paid for such service. But, in preparing your Canadian application, it is only necessary to copy the required application forms, specifications, claims and drawings as allowed and granted in your United States patent. Such work does not require further extensive study and technical consideration and in our opinion many United States attorneys charge exorbitant fees which are much out of proportion to the work actually done and services rendered. Many United States attorneys are not familiar with the technical procedure in prosecution before the Canadian Patent Office, which can only be had through years of constant practice and extensive experience such as has been had by our Mr. Shipman.

Canadian Representative

Furthermore, under the Canadian Patent Act, applicants from the United States must appoint a representative resident in Canada upon whom notice in reference to any procedure under the Patent Act may be served. If your application is filed through an United States attorney, he must arrange with and pay an attorney in Canada to act as representative for his client. If your application is prepared and filed through us, our Mr. Shipman's name is inserted as the representative without extra cost to our clients.

Experience and Facilities

For twenty-five years we have made a specialty of preparing and prosecuting Canadian applications for United States patentees and corporations and have among our clientele some of the largest and most reputable corporations in various parts of the United States. In our office, we have a staff of assistants specially trained in the preparation of such applications and have facilities for preparing the drawings by photolithograph process. Thus, we are in a position to promptly handle the preparation of applications at a minimum fee for our clients, in view of the constant volume of applications entrusted to our care from all parts of the United States and our system for promptly and carefully handling each application personally before the Canadian Patent Office.

Personal Attention

The business relative to Canadian patent, trade-mark and design applications naturally centres in Ottawa, where the Patent and Trade-mark Office is located, with its Officials and Examiners by whom all petitions and applications must be considered and approved for allowance.

Attorneys, located elsewhere than in Ottawa, have to prosecute their clients' applications by written correspondence, all of which must go through the routine procedure in the Patent and Trade-mark Office and must again await its turn before being taken up by the Examiner for consideration. Such correspondence procedure often delays an application many months. Furthermore, such attorneys have not got the complete Canadian Patent and Trade-mark Office records at their disposal for inspection, perusal and consideration of any patents or other references cited against their clients' applications. This necessitates that the distant attorney either purchase copies of the references cited (at an average cost of $3.00 each) from the Canadian Patent Office or engage an associate attorney located at Ottawa to handle the further prosecution of the application, either of which is added expense to the applicant. Furthermore, a great amount of time is often lost in written discussions and arguments between distant attorneys and the Examiners having a different viewpoint in regard to a certain feature of the invention or in reference to the subject matter of one or more of the claims.

Direct Service

Much time can be saved and the prosecution of your applications greatly facilitated by entrusting such business to a patent attorney resident in Ottawa, who has the entire Patent and Trade-mark Office records at his disposal, so that patents or other references cited by the Examiner can be examined without added expense to the applicant; who is in a position to personally interview the Officials and Examiners and orally discuss with them any and all matters and procedure relative to the application and who has facilities to promptly prepare and immediately file replies and amendments as agreed upon after such oral discussions. In our 25 years of practice before the Canadian Patent and Trade-mark Office here at Ottawa, we have had many applications for patents, trade-marks and designs on which a few minutes personal discussion with the Official or Examiner has cleared the difference of opinion and obtained the allowance, which a prolonged written argument might not have obtained or caused the applicant months of delay.

Selecting Your Attorney

In selecting an attorney to prosecute your Canadian patent, trade-mark or design applications, care should be taken to engage a registered Patent and Trade-mark Solicitor of experience and ability in the profession and of recognized standing before the manufacturers throughout Canada. For over twenty-five years, we have made a specialty of preparing Canadian patent, trade-mark and design applications for United States patentees, assignees and corporations and, during this time, have successfully prosecuted many thousands of applications for clients throughout all parts of the United States. Harold C. Shipman & Co. is the oldest firm of patent attorneys with head office in Ottawa and, in view of our location opposite the Canadian Patent and Trade-mark Office, we have at our disposal the entire Office records and are in a position to personally interview the Officials and Examiners in reference to all applications entrusted to our care, thus greatly facilitating the obtaining of the desired protection and the early allowance of such applications.

Our Mr. Shipman has been a member of the Board of Trade of Ottawa since 1916, has been publicly elected to the Board of Education of the City of Ottawa for fourteen years, has been elected a member of the Ottawa City Council, was a charter member of the Canadian Institute of Patent Solicitors, and is registered as a patent attorney to practice before both the Canadian Patent and Trade-mark Offices. All applications filed through our firm come under his personal supervision, which assures corporations and individuals that their applications will receive most careful preparation and skilful prosecution.

Selling Your Canadian Patent

We are in a position to either supply our clients with up-to-date lists of Canadian manufacturers engaged in manufacturing the classification of article or process to which their patents relate, so that they may write direct to such manufacturers, or we are in a position to place copies of the specifications, drawings and particulars of their patents directly before such manufacturers and negotiate in reference to selling their patents outright or entering into manufacturing licenses.

CONFIDENCE IN SHIPMAN & CO.

SCHWEYER ELECTRIC & MANUFACTURING CO.

412 Trust Building — Easton, Pa.

Harold C. Shipman & Co.
74 Sparks Street,
Ottawa, Canada.

Dear Sir:

We have been doing business with you for the last thirteen or fourteen years, and in view of the very efficient service you have rendered to us, we take this opportunity of expressing our appreciation of the personal attention that you have given our patents in Canada.

Your work in furthering our interests in the way of dormant applications, re-issues, and new patents, and the very expeditious manner in which you have handled our work has been very satisfactory to us, which, we appreciate, has been due to the personal attention given by your Mr. Shipman.

Wishing you continued success, we remain, Very truly yours,

SCHWEYER ELECTRIC & MANUFACTURING CO.,
D. Herbert Schweyer, President.

Consistent Service—"14 years Personal Service and still satisfied"

BUHR MACHINE TOOL CO.

Ann Arbor, Mich.

Hydraulic Press Manufacturing Co.,
Mount Gilead, Ohio, U.S.A.

Gentlemen:

We are in receipt of a letter from Harold C. Shipman, of Harold C. Shipman & Company, Ottawa, Canada, advising us that he has given our firm as reference to you.

In view of the good and prompt service the Harold C. Shipman & Company has given us in our recent application we feel justified in writing to you in their behalf before receiving your enquiry. We were very agreeably surprised at the very efficient manner with which the above company handled our recent application in Canada.

We had made some preliminary investigation, both through our United States patent attorney and trade sources in Canada, before placing our business with the above company, and they were highly recommended to us. Yours very truly,

BUHR MACHINE TOOL COMPANY,
J. F. Buhr, President.

The Old Reliable Firm—"Our firm investigated and highly recommended"

FINNELL SYSTEM, INC.

ELKHART, INDIANA

Harold C. Shipman & Co.,
74 Sparks Street,
Ottawa, Ont., Canada.

Gentlemen:

The prompt and painstaking effort you have given to our various patent applications for the Dominion of Canada, has created a very pleasing impression upon us and for which we take this occasion to thank you.

It is a pleasure to feel that one's interests will be taken care of with promptness and this is especially true in the prosecution of patents. There are so many things in which the Patent Attorney can be of inestimable value and we feel that you have always made our interest yours with the result that we have been unusually fortunate in securing those things necessary and vital to our interests.

If you ever desire to use our name in any way as a reference in order to assist you in securing service of your kind, we should be glad to have you use either this letter or call upon us in person. Yours sincerely,

FINNELL SYSTEM, INC.,
W. S. Finnell, President.

HAROLD C. SHIPMAN & CO.

PATENT SOLICITORS AND COUNSELLORS

PATENTS - TRADEMARKS - DESIGNS

49-50 CARLETON CHAMBERS OPPOSITE PATENT OFFICE

OTTAWA, CANADA

Fig. 7.

Fig. 8.

Fig. 10.

Fig. 9.

Fig. 11.

Inventor

CARL G. FISHER,

By Joseph F. Gulick

Attorney

Ser. No. 144290 Advertising Device

Fig. 1.

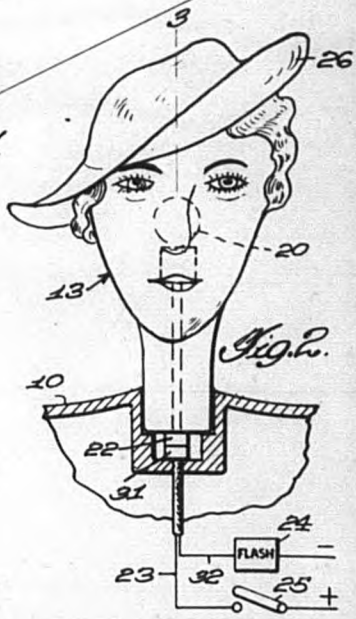

Fig. 2.

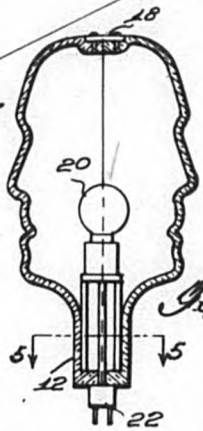

Fig. 3.

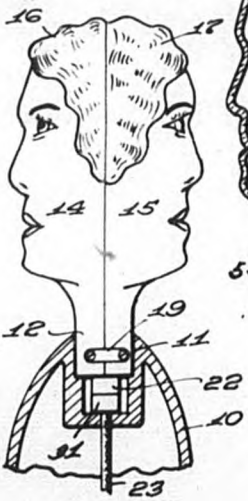

Fig. 4.

Fig. 5.

Fig. 6.

Inventor
CARL G. FISHER,
By Joseph F. Gulick
Attorney

Ser. no. 44,290 + Advertising Model.

This invention relates to improvements in models for display in show windows, show rooms or other places for the purpose of advertising some goods which may be supported by the model or for calling attention to other goods on exhibition in the room or window.

A general object is to provide a model which will arrest the attention of the passerbys and hold their attention and one in which the face of the model may be quickly changed without disturbing other portions of the model.

A further object is to provide means for lighting the face of the model and for flashing the lighting means to attract the attention of the public passing the window or thru the show room.

One method of effecting a quick change of the face of the model is to provide a head with a double face, one facing front and the other to the rear, the faces differing one from the other as, for example, one being a blonde and the other a brunette. The head will be rotatably mounted upon the body of the model so that either face may be tirned toward the front.

Further objects and advantages will become apparent from the description which follows.

Referring to the accompanying drawings whichnare made a part hereof and on which similar reference characters designate the same parts thruout the specification,

Figure 1 denotex a show window having my invention therein and used to attarct attention to mechandise in the window,

Figure 2 is a front elevation of the invention,

Figure 3 is a section on line 3-3 of Figure 2,

Figure 4 is a side elevation of the new model head,

Figure 5 is a section on line 5-5 of Figure 3,

Figure 6 is a detail showing the lighting means,

Figures 7 and 8 show the model displaying cigarettes,

Figure 9 shows the model used to advertise a pipe,

Figure 10 shows the model having a fur piece thereon, and

Figure 11 shows a modified head with animal faces.

In the drawings numeral 10 indicates the bust of a model of conventional design having a socket portion 11 in which the neck portion 12 of the head 13 is received. The head may be freely rotated to position the face at any angular position or to rotate the head completely around. The head is constructed of two portions 14 and 15 each of which may represent a different face. For example, the face 14 may be that of a blonde and the face 15 that of a brunette, the former having light hair 16 and the latter dark hair 17. The faces may be those of either males or females. By simply rotating the face from the front to the rear and bringing the rear face to the front the model is changed, for example, from a blonde to a brunette or vice versa.

The sections of the head may be held together in any suitable way. Such means should provide for ready exchange of heads or faces. As shown the faces are held together at the top by some suitable fastener 18 and at the bottom by a link 19 which is pivotally mounted on one section and engages over a pin in the other.

A globe 20 is positioned between the faces for illuminating them. This globe is mounted on a support 21 which may have resilient depending legs or prongs which engage the sides of the neck portion 12 for firmly holding the light or lights in place. The bulb or bulbs 20 may be colored any suitable tint to give the desired effect to the face.

The faces 14 and 15 will preferably be made of transparent or translucent material of any color. Examples of such material are glass, celluloid, mica, glucose, waterproofed paper or other water proofed material. The faces may even be made of sheet metal or partly of sheet metal with parts of transparent material.

The bulb is connected thru plug 22 and socket 31 with current wires 23 and 32, a switch 25 being provided in the one and a flash 24 of any well known construction in the other.

The modified forms shown in Figures 7 and 8 are used to advertise some cigarette, one figure having a cigarette 33 in the mouth and the other having the cigarette 34 in the hand.

The modified form shown in Figure 9 may advertise the pipe 35 which is in the mouth of the model or may advertise some brand of smoking tobacco positioned in the window or adjacent the model.

In Figure 10 the model is used to support a fur piece 36 and may be used in connection with a fur display in the window.

In Figure 11 is shown a modified form of model head in the form of some animal or animals. In this figure, for example one face 37 may be made to represent a bear's face, this head might well be used in displaying fur coats. Heads having faces of seals or foxes may obviously be used as well as the heads or faces of any other animal.

Lights may be placed in the heads just described, the faces all being made of transparent or translucent material. As in the forms shown in Figures 1 to 6 means may beprovided for fastening the opposite faces together and for turning on and off the light to give the flash to attract attention.

While the model may be used simply to attract attention by the flashing and by themodel face it serves a further purpose of supporting the articles on display as the hat 26, the cigarettes 33, 34, the pipe 35 and the fur 36. In addition to that it may call attention to articles on display as 27 and 28 and price cards 29 in show window 30.

While the model head has been shown as composed of two faced portions this is not to be construed as a limitation of the invention. The head may bemade with a removeable face and back portion.

While the model has been shown in relation to merchandise exhibited for sale it is not limited to this use but may find utility in other ways as to attract attention to anything on exhibition or display. The faces or form of the model may be made aritstic, humorous, or grotesque depending on the effect desired to be created on the spectators.

It is obvious that various changes may be made in my invention without departing from the essentials thereof. I, therefore, do not limit myself to the invention as specifically shown and described but only as set forth in the appended claims.

3-1

What I claim is:

1. A head for model or dummy comprising separable front and rear portions and having illuminating means psoitioned therebetween.

2. A head for a model or dummy comprising front and rear portions each made to resemble a human face, the front being different from the back and having illuminating means positioned between said portions.

3. A head for a model or dummy comprising separable front and rear portions, illuminating means positioned between said portions, and light flashing means for alternately lighting and extinguishing said illuminating means.

4. A head for a model or dummy comprising separable front and rear portions one of which is formed of tinted translucent material formed to resemble a human face, a light positioned at the rear of said face, and means for flashing said light.

5. In a device of the kind described the combination with the body portion of a model of a head portion rotatably carried by the body portion and comprising front and rear sections each resembling a human face, and made of tinted translucent material, a light bulb resiliently held between said sections, conduits extending thru said body portion to said bulb and a switch and a flasher in said conduits.

6. In a window display device the combination with a bust of a head on said bust having a translucent face portion and a flashing light positioned within the head.

What I claim is:

1. A head for model or dummy comprising separable front and rear portions and having illuminating means psoitioned therebetween.

2. A head for a model or dummy comprising front and rear portions each made to resemble a human face, the front being different from the back and having illuminating means positioned between said portions.

3. A head for a model or dummy comprising separable front and rear portions, illuminating means positioned between said portions, and light flashing means for alternately lighting and extinguishing said illuminating means.

4. A head for a model or dummy comprising separable front and rear portions one of which is formed of tinted translucent material formed to resemble a human face, a light positioned at the rear of said face, and means for flashing said light.

5. In a device of the kind described the combination with the body portion of a model of a head portion rotatably carried by the body portion and comprising front and rear sections each resembling a human face, and made of tinted translucent material, a light bulb resiliently held between said sections, conduits extending thru said body portion to said bulb and a switch and a flasher in said conduits.

6. In a window display device the combination with a bust of a head on said bust having a translucent face portion and a flashing light positioned within the head.

7. A model having a removable rotatable head mounted thereon said head composed of face portions differing one from the other one of said face portions having an article of merchandise mounted therein.

8. A removable head for a store model comprising separable front and back sections made to resemble animal faces and differing one from the other said faces being of translucent material.

9. The combination of an article displayed for sale of means for calling attention to said article comprising a head made with some feature in common with the article on display means for illuminating said head and means for calling special attention to said illuminating means.

For the Jackson file
F. Dodge Larson

WM.W.MUIR

July 12,1935

Honorable J. Edwin Larsen
Collector United States Internal Revenue
Jacksonville, Florida.

Dear Sir:

The capital stock tax return form for 1935 sent to KEEN SIGN CO. INC., has been received and sent to the writer, one of the original incorporators. This organization has never been completed and no stock has ever been issued; therefore, there is no return to be made.

Yours very truly

WM. W. MUIR.

Washington, D.C.
August 9, 1935.

Re Appliwation of Carl G. Fisher,
Serial No. 8,556
Filed February 27, 1935.
For: Signs.

Hon. Commissioner of Patents,

Examiner in Room 3605.

Sir:

In the above entitled application in response to the Office letter of April 19, 1935, please amend as follows:

Please cancel all the claims and rewrite them as follows:

5. A sign unit comprising a supporting frame, a plurality of channel members for rigidly supporting the frame in rigid position, a plurality of bars secured at their ends to said channel members and welded thereto, a translucent panel removably secured in said members and a translucent panel having symbols thereon arranged in said channel members in advance of said first named translucent panel.

6. A sign unit comprising a supporting frame, a plurality of channel members for supporting the frame in rigid position a plurality of bars secured at their ends to said channel members and welded thereto, a translucent panel positioned in said channel me members, a second translucent plate secured in said channel members, said second plate having symbols thereon and a light mounted at the rear of said panel and plate for illuminating the said symbols.

7. A sign unit comprising a supporting frame, a plurality of channel members for supporting the frame in rigid position, a plurality of bars secured at their ends to said channel members a translucent panel positioned in said channel members at one side of the frame, a second panel at the other side of the frame, a

light positioned between said panels and symbol bearing panels positioned in said frame in front of said panels.

8. An assembly of sign units each comprising a frame having a translucent panel mounted therein, a symbol bearing translucent panel mounted in front of said first named panel, a light positioned at the rear of said panels for illuminating said symbols, each of said units forming a complete sign or cooperating with other units to form a sign.

Remarks.

The claims have been rewritten to better define applicant's invention in view of the art cited. As now drawn the claims define the specific structure of the units composing the sign including the frame work and the supporting structure. The art does not show structures such as that specifically defined in each of the claims above. The simplicity of applicant's sign lends it for use as a single sign unit complete in itself or for use in making a larger sign in connection with other sign units.

A favorable consideration for the claims as now presented is requested.

Very respectfully,

Div 35. Room 5605 E/R Paper No. 4.

April 19, 1935.
Applicant: Carl G. Fisher
Ser. No. 8,556
Filed: February 27, 1935.
For : Signs.

This application has been examined.

Applied references:

Small	621,862	March 28, 1899	40-133.2
Evans	1,117,360	Nov. 17, 1914	40-133.2
Bellamy	944,087	Feb. 12, 1907	40-133
Robinson et al	1,393,971	Oct. 18, 1921	40-132
Hemmert	1,466,017	Aug. 28, 1923	40-132
Meahher	1,524,446	Jan. 27, 1925	40-133
Sackitt	1,620,396	Mar. 8, 1927	40-133.2
Manfre	1,847,775	Mar 1, 1932	40-133.2

The claims are all objected to as being indefinite on account of the numerous alternatives, such as "letters" symbols, numbers, pictures, etc" A single generic term should be used in each instance.

Claims 1 to 3 aremet by either evans or manfre.

Claim 4 is met by manfre.

Meacher and hemmert show means in the middle of the casing for supporting thelights. Small shows colored plates behind the sign plates; Robinson et al an offset 6 in a wall of the casing forming a seat for the edge of a glass plate; Ballamy and Sackett show rabbetts in a frame and strips for holding the edges of a panel in the frame; sackett and manfre show a series of sign units stacked on top of one another.

The claims at present in the case are all rejected.

Examiner.

This invention relates to signs, and particularly to replaceable and removable slides, panels or other surfaces thereof and to sign units or sections with replaceable and removable slides, panels, or other surfaces, so that the units may be used singly or in combination with other units.

An object of the invention is to provide a new and improved sign which can be used in small units or enlarged by the addition of other units and can be changed from time to time into different shapes and sizes by arrangement of the units.

A further object is to provide a means of supplying new slides, panels, or surfaces, to replace mutilated, lost, broken or destroyed ones, at low cost, without the time and expense of acquiring a new sign.

A further object is to provide a means whereby a sign may be changed conveniently by the insertion or use of new slides, panels, or surfaces without acquiring a new sign.

A further object is the division of a sign into units with mechanical, automatic or other lighting process or other treatment

for each unit so that each unit may function independently or in conjunction with other units, making possible the illumination or other display of single letters, signs, symbols, numbers, pictures, designs and other displays or figures, groups thereof, or the entire sign.

Further objects will become apparent as the description pr proceeds.

Referring to the accompanying drawings which are made a part hereof, and on which similar reference characters indicate similar parts:

Figure 1 is a cross section of a sign unit; Figure 2 shows an assembly, arrangement, or combination of three units. As these units will be constructed in different sizes as to length and height it is evident that the number of combinations of units is practically unlimited.

Item 1 is a clear or tinted or colored glass or any other transparent or translucent material. This plate or material covers the entire face or faces of the units or may cover parts thereof. This plate may be omitted when it is not required to make the interior of the sign water or rain proof. However by using this plate (item 1) many variations and effects aremade possible that could not be obtained otherwise, as will be explained in anotherplace. This plate may be held in place by mastic, clips, strips , or other appropriate means.

With respect to item 2, these are transparent, translucent, opaque plates of glass or other material. These plates may be blanks or may contain letters, numbers, symbols, or groups

of numbers, letters or symbols. The numbers, letters or symbols may be printed, painted, etched or raised. These plates are interchangeable in the standard sihn units and can readily be removed and replaced. The vertical edges of these plates may be square edged, tongued and grooved or ship-lapped. They are held in place by mastic, clips, or removable strips, or by other appropriate means. By using a tinted background plate (item 1) letters, symbols, or numbers on clear plate could be used, making the divisions between the item 2 plates invisible.

Item 3 is a conduit for electric wiring. This conduit runs the full length of a unit and has outlets as required for placing lights. The electric light bulbs may be clear, frosted or colored. The sign may be illuminated or not illiminated flashing, intermittent lighting or intermittent in the lighting of its separate or various units. Also, the units may be arranged or constructed to make possible writing or spelling by electrical or mechanical means.

Item 4. This is a runner continuous the length of the unit to the plates and slides. It may be of steel, bronze, or galvanized steel or wood, or other appropriate composition.

Item 5. This is the supporting frame or truss of the sign unit. It has been placed to prevent any shadows from being cast on the sign faces, making possible long units without structural members in the face of the sign.

Item 6. This is a chennel section spaced as required to hold the units rigid. It also provides the ribs for the envelope. Items 4, 5, and 6 are welded together each at all points of contact when metal is used.

Item 7. This is the envelope covering the top, bottom and ends and all other surfaces whichnare not sign faces. This envelope may be sheet copper, galvanized metal, or other matefial as required by conditions. The compositions and arrangements of units are made by bolts passing thru the flanges of the channels (item 6) of adjoining units.

Item 8. This is the mastic, clips, strips or other means of fastening provided to hold the plates in position.

It will be obvious to those skilled in the art that various modifications and changes may bemade in my device without departing from the spirit thereof, and therefore I do not limit myself to what is shown in the drawings and described in the specification but only as indicated in the appended claims.

Having thus fully described my said invention, what I claim as new and desire to secure by letters patent, is:

1. A sign having removable and replaceable slides, panel, or other surface units, the said slides, panel, or other surfaces units to conaain letters, symbols, numbers, pictures, designs and other figures or displays, and the means for removing and replacing said sides, panel or other surface units, substantially as set forth.

2. A sign unit having removable and replaceable slides, panels, or other surfaces for exposing thereon letters, symbols, numbers, pictures, designs, and other figures or displays, which said sign unit contains means for adjusting or combining itself to or with other sign units or signs, substantially as set forth.

3. A slide, panel or other surface unit containing letters, symbols, numbers, pictures, designs, and other figures

or displays and means for replacing and removing the same in and from signs, substantially as set forth.

4. The combination in a sign of removable and replaceable units, each containing removable and replaceable slide, panel, or other surface units, which said slide, panel or other surface units contain letters, symbols, numbers, pictures, designs, and other figures or displays, substantially as set forth.

CARL G. FISHER
Montauk, New York

October 4th, 1935

Watson Standard Co.
Pittsburgh
Pennsylvania

Gentlemen:

I have a patent pending and idea generally on the sale of window signs also outdoor signs in glass that might be quite valuable. I am not at all sure that you would be interested in same.

If the patents and patents pending and general idea is worth anything it should increase the sale of glass.

However, I would like to discuss this with your engineer also a representative of your company who could analize my plan of promoting the sale of a good many thousand signs.

I am not at all sure that my patents or patent applications are worth anything and Iam talking to you frankly but it can't do any harm to talk it over with your chief engineer and the sales promotion program I have in mind.

Yours very truly

Carl G. Fisher

October 14, 1935.

Mr. Thos. W. Milton,
731 Covington Drive,
Detroit, Mich.

Dear Tommy:-

The President of The Emeloid Company came over to see me and he is "gun shy" unless the patents come through. In the meantime I have thought of some more friends of mine who have a very nice small factory in Indianapolis. They have their own traveling men to reach the very trade that I wanted to start after. They are very reliable and honest people and I think I can interest them. I got a start without any cash being involved by anybody.

I am sure I enjoyed talking with you, and hope you will have a chance to get down here. If this sign business develops I am sure going to get you hooked into it but not until it looks like something worth while.

I do not know where Margaret saw the waffle iron but apparently it was an inexpensive thing. She will reach here within the next few days but I could not catch her on the road as she is coming down with our cook, but as soon as she gets here I will have her take it up, and I have a sort of hazy remembrance that it was a Sears Roebuck iron.

I think I will forget the Emeloid fastening of a letter to glass for a week or so until I finish some experiments that are going on here, and then I will write you. I know I am hoping that we will be able to get a start because I know there is a big demand for this product regardless of patents.

Yours,

CGF-C

CARL G. FISHER.

November 1, 1935.

Mr. H. C. Buschman,
1010 Central Ave.,
Indianapolis, Ind.

Dear Harry:-

I have yours of the 28th.

I think it would be better for your friend, Mr. Horuff, to come down at once and look the situation over.. I would rather buy the signs we need here from the new corporation, even if I have to pay express on them from Indianapolis to here.

There are a lot of little details that just need somebody's work to get them straightened out. They are not mechanical, they are just plain horse sense details that occur in any little plant just starting. Our whole force here from the top floor down to the bottom floor have been so busy in the last year working on the Montauk reorganization, selling property, etc. that we are just about worked to a frazzle and I am looking for a lay-off for a month.

I do know that the sign business is growing better all the time and I am sorry you can not get down before December.

Yours very truly,

CGF-C

CARL G. FISHER

1201-S

CLASS OF SERVICE

This is a full-rate Telegram or Cablegram unless its deferred character is indicated by a suitable sign above or preceding the address.

WESTERN UNION

(38)

SIGNS

DL = Day Letter
NM = Night Message
NL = Night Letter
LC = Deferred Cable
NLT = Cable Night Letter
Ship Radiogram

R. B. WHITE
PRESIDENT

NEWCOMB CARLTON
CHAIRMAN OF THE BOARD

J. C. WILLEVER
FIRST VICE-PRESIDENT

The filing time as shown in the date line on full-rate telegrams and day letters, and the time of receipt at destination as shown on all messages, is STANDARD TIME.

Received at 827 LINCOLN ROAD MIAMI BEACH FLO 51413

1935 NOV 18 PM 3 41

MINUTES IN TRANSIT

FULL-RATE	DAY LETTER

MZQ71 10=INDIANAPOLIS IND 18 204P

CARL G FISHER=

MORE CONVENIENT FOR HORUFF NOW WHEN SHOULD HE RUN DOWN=

H C BUSHMAN.

next three - days -

BY DIRECT WIRE FROM

WESTERN UNION

1223-S

CLASS OF SERVICE

This is a full-rate Telegram or Cablegram unless its deferred character is indicated by a suitable sign above or preceding the address.

SIGNS

DL = Day Letter
NM = Night Message
NL = Night Letter
LC = Deferred Cable
NLT = Cable Night Letter
Ship Radiogram

R. B. WHITE, PRESIDENT
NEWCOMB CARLTON, CHAIRMAN OF THE BOARD
J. C. WILLEVER, FIRST VICE-PRESIDENT

The filing time as shown in the date line on full-rate telegrams and day letters, and the time of receipt at destination as shown on all messages, is STANDARD TIME.

STRAIGHT TELEGRAM

Miami Beach, Fla., Nov. 18, 1935.

H. C. Bushman,
Indianapolis, Indiana.

Saturday will be about the right time for Horuff.

CARL G. FISHER

Charge to
Carl G. Fisher, Personal.

THE QUICKEST, SUREST AND SAFEST WAY TO SEND MONEY IS BY TELEGRAPH OR CABLE

TELEPHONE
NATIONAL 7340

PATENTS
TRADE-MARKS
DESIGNS

JOSEPH F. GULICK
PATENT LAWYER
1048 EARLE BUILDING
WASHINGTON, D. C.

November 19, 1935.

Mr. Carl G. Fisher,
Miami Beach,
Florida.

Dear Mr. Fisher:

In response to your telegram of the 18th which was received this morning I am sending copies of applications for signs, as follows:

1. Copy of specification and drawing in application Serial No. 8,556 filed February 27, 1935 for Signs.
2. Copy of Patent Office action dated April 19, 1935 in same.
3. Copy of an Amendment filed August 9, 1935.

No claims have been allowed in the case to date.

1. Copy of specification and drawings in application Serial No. 44,290, filed October 9, 1935, for Advertising Model.

This application includes all suggestions as to changeable store window models. There has been no action by the Patent on this application to date.

I am sending papers by Air Mail to indure their reaching you in time for you to look over them before Saturday.

Very truly yours,

J. F. Gulick

JFG/s

PS. I hope your conferences on Saturday will result in something worth while.

JFG.

Miami Beach, Fla., November 19, 1935.

Mr. Thos. W. Milton,
731 Covington Drive,
Detroit, Mich.

Dear Tom:-

A representative of the Bushman Company will be here Saturday to talk about taking over the sign business on a commission basis and do the work in Indianapolis, as they have a very large plant there with all overhead taken care of, such as shipping, assembling, etc., aside from traveling representatives.

I have made applications for patents for window signs, especially with heads of human beings and animals, to be illuminated from the inside - flashing or fixed - and in your "spare moments" you have got to dig up some little apparatus that is inexpensive that will make glass eyes turn sideways only, or perhaps revolve and present a different colored eye.

I know this is quite a tough job but if you can work it out, then you won't have to work for anybody any more. We have a very successful sign so far at a very nominal first cost and only the operation of the electric lights with a 25 cent flash light apparatus that is almost indestructible.

I see greater possibilities in this sign for us every day. We are putting up three on the Lincoln and building one for the Flamingo and twenty cottage signs. These will replace wooden signs. We can compete with a sign painter who paints his sign on an old fence board.

I think you will get what I am shooting at in this letter better than by what I told you in the first place.

Yours,

CGF-C

CARL G. FISHER.

November 21, 1935.

Mr. Thos. W. Milton,
731 Covington Drive,
Detroit, Mich.

Dear Tommy:-

In connection with the moveable eyes in the faces for the window display, why cannot you use a magnet - they are very cheap and, perhaps, will do the stunt and save a lot of mechanism: at least it is worth thinking over.

Yours,

CGF-C

CARL G. FISHER

Ser. No. 44290
Filed Oct 9, 1933

Dec 4 '35

This invention relates to improvements in models for display in show windows, show rooms or other places for the purpose of advertising some goods which may be supported by the model or for calling attention to other goods on exhibition in the room or window.

A general object is to provide a model which will arrest the attention of the passerbys and hold their attention and one in which the face of the model may be quickly changed without disturbing other portions of the model.

A further object is to provide means for lighting the face of the model and for flashing the lighting means to attract the attention of the public passing the window or thru the show room.

One method of effecting a quick change of the face of the model is to provide a head with a double face, one facing front and the other to the rear, the faces differing one from the other, as, for example, one being a blonde and the other a brunette. The head will be rotatably mounted upon the body of the model so that either face may be turned toward the front.

Further objects and advantages will become apparent from the description which follows.

Referring to the accompanying drawings which are made a part hereof and on which similar reference characters designate the s ame parts thruout the specification,

Figure 1 denotes a show window having my invention therein and used to attract attention to merchandise in the window,

Figure 2 is a front elevation of the invention,

Figure 3 is a section on line 3-3 of Figure 2,

Figure 4 is a side elevation of the new model head,

Figure 5 is a section on line 5 - 5 of Figure 3,

Figure 6 is a detail showing the lighting means,

Figures 7 and 8 show the model displaying cigarettes

Figure 9 shows the model used to advertise a pipe.

Figure 10 shows the model having a fur piece thereon, and

Figure 11 shows a modified head with animal faces.

In the drawings numeral 10 indicates the bust of a model of conventional design having a socket portion 11 in which the neck portion 12 of the head 13 is received. The head may be freely rotated to position the face at any angular position or to rotate the head completely around. The head is constructed of two portions 14 and 15 each of which may represent a different face. For example, the face 14 may be that of a blonde and the face 15 that of a brunette, the former having light hair 16 and the latter dark hair 17. The faces may be those of either males or females. By simply rotating the face from the front to the rear and bringing therear face to the front the model is changed, for example from a blonde to a brunette or vice versa.

The sections of the head may be held together in any suitable way. Such means should provide for ready exchange of heads or faces. As shown the faces are held together at the top by some suitable fastener 18 and at the bottom by a link 19 which is pivotally mounted on one section and engages over a pin in the other.

A globe 20 is positioned between the faces for illuminating them. This globe is mounted on a support 21 which may have resilient depending legs or prongs which engage the sides of the neck portion 12 for fimmly holding the light or lights in place. The bulb or bulbs 20 may be colored any suitable tint to give the desired effect to the face.

The faces 14 and 15 will preferably bemade of transparent or translucent material of any color. Examples of such material are glass, celluloid, mica, glucose, waterproofed paper or other waterproofed material. The faces may even be made of sheet metal or partly of sheet metal with parts of transparent material.

The bulb is connected thru plug 22 and socket 31 with current wires 23 and 32, a switch 25 being provided in the one and a flash 24 of any well known construction in the other.

The modified forms shown in Figures 7 and 8 are used to advertise some cigarette, one figure having a cigarette 33 in the mouth and the other having the cigarette 34 in the hand.

The modified form shown in Figure 9 may advertise the pipe 35 which is in the mouth of the model or may advertise some brand of smoking tobacco positioned in the window or adjacent the model.

In Figure 10 the model is used to support a fur piece 36 and may be used in connection with a fur display in the window.

In Figure 11 is shown a modified form of model head in the form of some animal or animals. In this Figure, for example, one face 37 may be made to represent the face of a raccoon and the other face 38 may represent a bear's face. This head might well be used in displaying fur coats. Heads having faces of seals or foxes may obviously be used as well as the heads or faces of any other animal.

Lights may be placed in the heads just described, the faces all being made of transparent or translucent material. As in the forms shown in Figures 1 to 6 means may be provided for fastening the opposite faces together and for turning on and off the light to give the flash to attract attention.

While the model heads may be used simply to attract attention by the flashing and by the model face it serves a further purpose of supporting the articles on display as the hat 26, the cigarettes 33,34, the pipe 35 and the fur 36. In addition to that it may call attention to articles on display as 27 and 28 and price cards 29 in show window 30.

While the model head has been shown as composed of two faced portions this is not to be construed as a limitation of the invention. The head may be made with a removeble face and back head portion.

While the model has been shown in relation to merchandise exhibited for sale it is not limited to this use but may find utility in other ways as to attract attention to anything on exhibition or dispaay. The faces or form of the model may be made artistic, humorous or grotesque depending on the effect desired to be created on the spectators.

It is obvious that various changes may be made in my invention without departing from the essentials thereof, I, therefore, do not limit myself to the invention as specifically shown and described but only as set forth in the appended claims.

What I claim is:

1. A head for model or dummy comprising separable front and rear portions and having illuminating means positioned therebetween.

2. A head for a model or dummy comprising separable front and rear portions each made to resemble a human face, the front being different from the back and having illuminating means positioned between said portions.

3. A head for a model or dummy comprising separable front and rear portions, illuminating means positionedbetween said portions, and light flashing means for alternately lighting and extinguishing said illuminating means.

4. A head for a model or dummy comprising separable front and rear portions one of which is formed of tinted translucent material formed to resemble a human face, a light positioned at the rear of said face, and means for flashing said light.

5. In a device of the kind described the combination with the body portion of a model of a head portion rotatably carried by the body portion and comprising front and rear sections each resembling a human face, and made of tinted translucent material, a light bulb resiliently held between said sections, conduits extending thru said body portion to said bulb, and a switch and a flasher in said conduits.

6. In a window display device the combination with a bust of a head on said bust having a translucent face portion and a flashing light positioned within the head.

7. A model having a removable rotatable head mounted thereon said head composed of face portions differing one from the other one of said face portions having an article of merchandise mounted therein.

8. A removable head for a store model comprising separable front and back sections made to resemble animal faces and differing one from the other said faces being of translucent material.

9. The combination of an article displayed for sale of means for calling attention to said article comprising a head made with some feature in common with the article on display means for illiminating said head and means for calling special attention to said illuminating means.

(COPY)

PETITION

TO THE COMMISSIONER OF PATENTS:

Your petitioner (1) Carl G. Fisher, a citizen of the United States, residing at Miami Beach, in the county of Dade, and State of Florida, and whose post-office address 1633 Jefferson Avenue, prays that Letters Patent may be granted to himself for the improvements in Models set forth in the annexed Specification.

And he hereby appoints (2) Joseph F. Gulick, of Earle Building, Washington, D. C., Register No. 12,390, Attorney with full power of substitution and revocation to prosecute this application, to make alterations and amendments therein, to sign his name to the drawings, to receive the Letters Patent, and to transact all business in the United States Patent Office connected therewith.

Signed at Miami Beach, in the County of Dade and State of Florida this 4th day of December, 1935.

(Signed) Carl G. Fisher.

- - - - - - -

SPECIFICATION.

TO ALL WHOM IT MAY CONCERN:

BE IT KNOWN, That Carl G. Fisher, a citizen of the United States, residing at Miami Beach, in the County of Dade and State of Florida, have invented certain new and useful improvements in Models, of which the following is a specification:

(Insert Drawing)

This invention relates to improvements in models for use in connection with the display of merchandise in store windows, show rooms, show windows or other places where merchandise may be displayed. The model may be used actually to support articles of merchandise or may be used to attract attention to merchandise adjacent the model.

One prime object of the invention is to provide a model of such construction as will cause it to attract the attention of the potential customers passing the window or show counter or thru the room.

The invention is an improvement over the models shown and described in my co-pending application Serial No. 44,290 filed on October 9, 1935 for Advertising Model and the improvement consists principally in the eyes of the model. In the present application the model is provided with movable eyes and with mechanism for imparting a number of movements to the eyes.

For purposes of simplicity the present model heads are shown with only one face. The invention is intended to be applied to the two faced heads shown in the co-pending application referred to above as well as to the single faced heads here shown.

Further objects and advantages will become apparent from the description which follows.

Referring to the accompanying drawings which are made a part hereof and on which similar reference characters refer to the same parts thruout the specification.

Figure 1 is a view in elevation of a show window having my new model therein in association with merchandise on display.

Figure 2 is a side view of the model head with parts broken away to show a side view of mechanism for moving the eyes of the model.

Figure 3 is a view taken substantially on line 3-3 of Figure 2 showing the mechanism for moving the eyes but on a larger scale than the showing in Figure 2.

Figure 4 is a section taken on line 4-4 of Figure 3.

As shown in Figure 1 a model 10 is shown in a window 11 in which merchandise 12 and 13 is also shown. Sale signs with price marks 14 and 15 may be placed adjacent the articles 1a and 13 as indicated.

The model head 16 may be of the construction shown in the co-pending application referred to or may have a single face. The single face is shown for the purpose of simplicity without limiting the invention to this construction. The model head is provided with movable eyes 17 set in sockets and held therein by springs 21 which may be secured to the inside of the face by rivets or screws 22 or any other suitable means. Means is provided for imparting movement to the eyes consisting of a motor 23 operating thru reducing gears 24.

The eyes are connected by a link 20 having ball and socket connections 19 with rearwardly extending pins 18 fastened to the eyes. An operating lever 31 is connected by ball and socket joint 26 with the link 20. This lever has an elongated slot 25 which fits over a pin 28 on a bracket 27 mounted within the head. The lower end of the lever 31 is provided with a cam slot 20 within which engages a pin 30 on the slowly driven gear plate 32.

From the structure described it will be apparent that operation of the motor will impart a slow rotary motion to the gear 32 thru the reduction gearing 24. The pin 30 engaging the cam slot will impart both a vertical and a lateral motion to the lower end of the lever 31which will in turn impart the same movements to the link 20. This will give the eyes both a vertical and a lateral movement and will also give them a somewhat rolling motion.

If desired the lever may be so arranged that either the vertical or the lateral movement may be imparted to the eyes without the other.

While the mechanism has been shown as moving the eyes in unison it may be arranged to move the eyes separately or to move them in different directions, the purpose being to attract attention. Any unusual sign or moving sign will arrest attention. This device is designed to provide just such a sign.

The face of the model will be made of any suitable material and may be translucent, semi-transparent or transparent material. Preferably a light will be positioned within the head to illuminate the face and this light may be provided with a flasher to give better effect to the sign.

While the head has been shown as of a single piece, it obviously can be made of separable portions held together in any suitable way, as, for example, shown in the co-pending application referred to.

It will be obvious that various changes may be made in my invention without departing from the essentials thereof. I, therefore, do not limit myself to the structure as shown in the drawings and as described in the specification but only as set forth in the appended claims.

What I claim is:

1. An advertising model having a head with movable eyes and means for moving the eyes.

2. An advertising model having a head with translucent face portions, movable eyes and means for moving the eyes.

3. An advertising model having a head with translucent face portions, movable eyes and means for moving the eyes vertically.

4. An advertising model having a head with translucent face portions, movable eyes and means for moving the eyes horizontally.

5. An advertising model having a head portion composed of separable portions and having movable eyes and means for rolling the said eyes.

6. An advertising model having a head with movable eyes, each eye being movable independently of the other and means for moving the eyes separately or in unison.

7. An advertising model having a head composed of separable portions and having a movable eyes therein and means for moving the eyes in a plurality of movements.

IN TESTIMONY WHEREOF I affix my signature.

(Signed) Carl G. Fisher.

- - - - - - -

O A T H

STATE OF FLORIDA)
) ss:
COUNTY OF DADE)

CARL G. FISHER, the above-named petitioner, being duly sworn, deposes and says that he is a citizen of (1) the United States and resident of Miami Beach, Dade County, Florida; that he verily believes himself to be the original, first, and (2) sole inventor of the improvements in Models described and claimed in the annexed specification; that he does not know and does not believe that the same was ever known or used before his invention or discovery thereof, or patented or described in any printed publication in any country before his invention or discovery thereof, or more than two years prior to this application, or in public use or on sale in the United States for more than two years prior to this application; that said invention has not been patented in any country foreign to the United States on an application filed by him or his legal representatives or assigns more than twelve months prior to this application; and that no application for patent on said improvement has been filed by him or his representatives or assigns in any country foreign to the United States, except as follows: (3) None.

(Signed) Carl G. Fisher.

SWORN to and subscribed before me this 4th day of December, 1935.

(Signed) Evelyn Ellis,
Notary Public
State of Florida at Large,
My Commission Expires July 10, 1938.

(Notarial Seal)

xxxxxxxxxxxxxxx
Miami Beach, Florida,
December 9, 1935.

Mr. H. C. Buschmann,
1002 Central Avenue,
Indianapolis, Indiana.

Dear Harry:-

Talk to Mr. Horuff and tell him that one of our stockholders and trustees for the Company is coming down and will be here tomorrow or the next day, and I will write you further then. In the meantime will say that things are looking up considerably.

I think we have discovered a color that is a little bit better and more reserved and proper for hotel signs and window signs except such things as garages and outdoor signs. I will write you further about this .

Yours,

CGF:AVM

CARL G. FISHER.

xxxxxxxxxxxxxxx
Miami Beach, Florida.

December 9, 1935.

Mr. Thos. W. Milton,
731 Covington Drive,
Detroit, Michigan.

My dear Tommy:-

We have a pair of 40 H.P. Packard marine motors in a little boat, which is a 32-foot Purdy boat. I think the records will show you what they are. We are somewhat afraid of pulse motors -- if that is the name.

Have you brought out any pumps to take the place of these outfits? We cannot use gravity feed with a carburetor.

The sign business is looking up. I am trying to get a company together. If you can wiggle out a cheap eye that will wink in a face, I think it is patentable, and my lawyers think we may get a patent that is basic; if so, we certainly have a bear-cat for a window display. We can beat anything in a show case on Lincoln Road, which means anything direct from New York.

Yours,

CARL G. FISHER.

CGF:AVM

F. J. HORUFF, PRESIDENT

W. E. SLINGERLAND, SEC'Y-TREAS.

Indiana Amusement and Vending Machine Assn.

OFFICE OF SECRETARY
18 WEST TWENTY-SECOND STREET
INDIANAPOLIS, INDIANA

December 11 1935.

Mr. Carl G. Fisher.
Miami Beach, Fla.

Dear Mr. Fisher,

After returning home, I have thoroughly investigated the sign business.

From what I find, what you are trying to do, that field has been fully covered. It is hard to get into the other man's game, unless you can outsmart him with something that is newer, better or at a less price. I have taken this up with Harry Buschmann and he has the same reaction.

I have been going through just about the same that you have, and am very anxious for a "Comeback"

You will notice from this letter heading, my connection with this Indiana Amusement and Vending Machine Assn.

At the begining of the depression, I took up with this game, because there is nothing that will yeild as large a profit, on a small investment. This comprises mostly play-boards and slot machines. One of the heaviest expence has been to fix the Mayor, the Prosecutor or the Sheriff.

For what you have done for Miami and the Beach, they owe you every thing. You should get anything you ask for.

If you are interested I would be glad to come down to see you. I can put this over for you in a big way.

Mrs. Horuff joins me in thanking you again, for your kind hospitallity while we were there, and hoping that you are feeling fine again.

Let me hear from you at once, addressing me at New Augusta, Indiana.

Very sincerely yours,

F. J. Horuff

New Augusta, Indiana. R.R.1

December 16, 1935.

Mr. Frank J. Horuff,
New Augusta, Indiana.

My dear Mr. Horuff:-

I just have a letter from the Trustees of the Fisher Company which clears up the situation so that you can go ahead in Indianapolis and use my name as a Vice-President of the new Sign corporation.

I cannot give the corporation a great deal of time but I can give it a lot of advice, and I believe my name will help you a great deal in the Middle West, and perhaps in the East and other points, in promoting this sign business.

There is a demand here, and anticipating this demand I am putting up a small building here, about 12 x 12 feet, principally to show the sign, on one of the two principal causeway boulevards of this district.

Our Company, the Carl G. Fisher Corporation, owns property on the Venetian Causeway which we have leased, but we have a large amount of vacant ground and this little building at this point will attract a great deal of attention, and will cost very little and we can assemble there all the signs we need for this particular district; but the signs that are sold here during the winter time will be of great advantage and help the sign sales in the Northern districts in the summer time, or after the season here is over.

At any rate, it is necessary to move without delay, and I am going ahead at my own expense to put up this little building, which will cost perhaps $150.00, but the sign will be very outstanding and from it we should be able to get enough business to support this job through the rest of the season - at least, I am taking the obligation on myself for the benefit of the Sign corporation.

I think the name of the corporation should be "The Flash Sign Company", since it is a flashing sign, and I don't believe this name is in use, and it should be copyrighted,

There is a lot of work if you want to get in the business and go ahead along the lines we talked about. I think a basis of 10% of your gross, or 5% of your net, sales will be satisfactory to us, under a contract which is drawn mutually satisfactory.

If you are further interested, let me know immediately.

We are terribly handicapped here in getting any signs of any kind and I think it would be much better if we could buy signs for this district, particularly the painted numbers and letters, and then have them assembled here. We certainly must have a

registering number and letter die, or cut-out, that will allow us to paint the signs quickly on glass at the least possible expense.

As things are shaping up here now, you could do this work in Indianapolis and ship them here to us by freight, or even by express, as far as the glass is concerned, for less than we could have it done here. There is a great deal of confusion here now among mechanics and painters, and all sorts of expert mechanics such as we need to hang the signs, are almost impossible to get at all except at a cost of $2, $3, or $4 an hour.

The young man I have picked out to be in charge of this branch down here is active and can deliver the goods and see that the signs are hung and hooked up properly. He is not a business man but he is a very necessary piece of the organization, because business men cannot go out and hang up these signs and see that they are hooked up properly.

We have lost a tremendous amount of business by not getting into it two months ago, but I think we can pick up enough to get started nicely this winter, and if you can get started immediately on the most simple sign, I think you will then be ready for the window display sign which I am depending on Tommy Milton to perfect, as far as the mechanism is concerned, at a very low cost.

Of course, as I told you, we could perfect a mechanism for a window display in a few hours that would be expensive, but I expect to see Milton bring out a magnet control that will cost only a dollar, instead of a complicated apparatus.

A Neon representative called on me yesterday, and his commission on Neon business is rather small. He was very anxious to make arrangements with our Company, as soon as we get ready, to come with us because he sees possibilities with our signs that the competition of the Neon would not meet. I am holding him in the air until we are in position to talk business with him. He is a very good salesman and I think we can use him.

However, I am anxious to get my ideas into your hands so that you can work out the details that we talked about and get going, and also where we can order signs from you to come here for assembly.

In fact, I have a lot of other work to do in the Carl G. Fisher Corporation and I am turning over to the Fisher Corporation a percentage of this profit - whatever it may be - without any expense to the Corporation, and, as I explained to you, I have borne the expense of the patent applications and all preliminaries myself.

Yours,

CGF:AVM CARL G. FISHER.

P.S.-- We are now assembling a sign with stippled white background and red letters, instead of so much red for a background. I also want to get a sign with a stippled white background in blue letters, but there isn't any suitable paint in this town for the job. Not only that, but sign painters now are making tremendous wages here, and we cannot get any of them to tackle an experimental job at anything except prohibitive prices.

Three different sign painters here couldn't take the job within the next 60 days at any price, as they all have more than they can possibly do.

We have been waiting about three months to have a sign re-lettered, which is already built but the hurricane blew most of the paint away.

It is a hell-of-a- lot of trouble to attend to these little details, which looks as if they could be easily and quickly attended to - but, that is just the situation that is here now.

I ordered the framework for the sign at the Flamingo over 60 days ago. We haven't got it yet. As a last resort, we are having a different sign altogether, come from New Jersey - the framework, I mean, - by express, to give us what we will have to get by with this season, if we have any sign at all.

C.G.F.

c.c. to Mr. Emery Flinn
Mr. C. M. Keys
Mr. Lindsey Hopkins
Mr. F. R. Humpage.

UM-ON
INCORPORATED
515 NORTH LIBERTY STREET
INDIANAPOLIS

12/mt. 35.

Mr Carl G Fisher
Miami Beach Fla -

Dear Mr Fisher:

It seems like you are determined to put over the sign business. Determination is half of the battle.

After receiving your recent letter I looked further in the business. I have been told by several, the all glass sign you have in mind is impracticable for two reasons, namely the paint wont stand the weather conditions, and further they are prohibited in most cities on account of local ordinaces.

I have come in contact with the above firm, which was put

LUM-ON
INCORPORATED
515 NORTH LIBERTY STREET
INDIANAPOLIS

(2)

out of business when the depression
come on for the lack of capitol.
I think they have what you are
looking for, a raised letter wich
is interchangable, the colors
are burnt in the glass, a wonderful
reflector, and a sign which
complys with all laws in any city.
This corporation is all set up.
They have over $10,000.00 worth of
dies and paterns.
We can go in this company not
costing us a cent, they only to
share in the net profits or
produce signs at a price.
They are now producing a model
sign of the various colors

UM-ON
INCORPORATED
515 NORTH LIBERTY STREET
INDIANAPOLIS

which will be brought down to you by one of that outfit or myself.

You did not answer my letter pertaining to the vending machine game, I presume it did not interest you. Will advise you just as soon as model is ready.

With the seasons greetings I remain

Very truly yours

Frank J. Hornff

New Augusta Ind.

December 27, 1935.

Mr. Frank J. Horuff,
New Augusta, Indiana.

My dear Mr. Horuff:-

I have yours of the 24th.

I don't think you examined the signs at the Lincoln; otherwise, you would have noticed that they are not subject to weather conditions - unless you put them in a bath tub.

I am not worried about city ordinances as we haven't run against any yet; and I don't know of a city in the United States that I have been in where they don't have more or less glass signs. Whoever gave you this hokum and bunkum must be cracked. Why not ask them where there is a town with no glass signs, such as oil companies have, and tire companies, garages, etc.? However, I only mention this for your own benefit.

A letter burnt in the glass might be very practical and more practical than paint. I would certainly like to see a sample of it.

I don't expect any patents on the interchangeable letter, as the interchangeable letter is used on theaters all over the United States, but I do expect some strong assistance in patents on the window models.

I would not be interested in any vending machine game. I would like, however, to see that burnt glass sign and know the cost.

Yours,

CGF:AVM

CARL G. FISHER.

January 2, 1936.

Mr. F. J. Horuff,
R. R. #1,
New Augusta, Indiana.

My dear Mr. Horuff:-

I have yours of December the 11th.

I have just written Harry Buschmann a letter regarding your letter, which he no doubt will show you.

I can't quite see your arguments. However, that is up to you.

I wish you a Happy New Year.

Yours,

CGF:AVM

CARL G. FISHER.

INDIANAPOLIS ATHLETIC CLUB
MERIDIAN AT VERMONT

1/3.36

Mr Carl G. Fisher
Miami Beach Fla.

Dear Mr Fisher:

Answering yours, I don't want you to pass judgment on signs until you have seen the model which will be ready very shortly now.
They have been somewhat delayed on account of some parts missing, as I have told you the Corp. has been out of business for some time.
Will advise you just as soon as the model is ready.

Very truly yours

T. J. Hamff

New Augusta
Ind.

January 27, 1936.

Mr. F. J. Horuff,
New Augusta, Indiana.

Dear Mr. Horuff:-

Yours of the 3rd received.

Any time you have any new dope, let me know.

So far, we are still held up on our patent applications.

Yours,

CARL G. FISHER.

CGF:AVM

Mr. F. D. Staley,
Staley & Crabb
515 North Liberty St.,
Indianapolis - Indiana.

This is the man to whom General Tyndall wrote regarding the sign business, on Feb. 10, 1936.

FRANK J. HORUFF
RURAL ROUTE 1
NEW AUGUSTA, INDIANA

2/8 36

Mr Carl G. Fisher Miami Beach Fla

Dear Mr Fisher:

No doubt by this time Bob Tindal has reported to you about the sign business. I think we have got what you want both for out and inside purposes they are very effective and both covered with patents. You perhaps know our mutual friend Harry Busahman is confined in the hospital and in very bad shape, inlarged liver, heart trouble and whatnot. Wednesday night they thought he would pass out of the picture, he is somewhat better today.

FRANK J. HORUFF
RURAL ROUTE 1
NEW AUGUSTA, INDIANA

We have been held up on getting out the signs as I had previously written you these companies have not been operating lately, and it took some time to get their stuff together.
We can ship the model sign down to you, or send a man with a truck with same
Let me hear from you

Very sincerely yours

F. J. Horuff

February 10, 1936.

Mr. F. D. Staley,
515 North Liberty St.,
Indianapolis, Indiana.

Dear Staley:-

I have just gone over the sign situation with Mr. Fisher and he has quite a good idea of something new in display that patents are applied for.

I told him about your work, especially the metal screen that is filled with glass for indoor counter advertising, etc.

We believe it would be to your interest to drive down here, as you spoke of doing, with samples of this character.

The sign business in this part of the country is enormous - probably only equalled by New York City. In addition, all executives of enormous chain store business are here from time to time, and I would recommend that you take a trip down here and look things over as a matter of prospects for considerable future business.

Everything is crowded here and they are having a wonderful season.

While I found the roads rather bad coming down, they should be cleared up by this time.

Let me know if you expect to come down.

Sincerely yours,

RHT:AVM

Chartered Institute of American Inventors
INCORPORATED UNDER FEDERAL LAWS
BARRISTER BUILDING — 635 F STREET, N. W.
EIGHTH AND MEZZANINE FLOORS
TRUSTEES
CHARLES BEARD
J. H. GRIMES
A. F. LAUFER
OWNED AND MANAGED BY INVENTORS
CABLE ADDRESS "CHARTAMER"
Washington, D.C.

February 13, 1936

Mr. Carl G. Fisher
Miami Beach, Fla.

Dear Mr. Fisher:

The Chartered Institute is sending you two folders: (1) "Successful Selling of Inventions," which gives proof of actual marketing of both patented and unpatented ideas and (2) "Concerning Our Association," a folder illustrating the business facilities which have brought success in selling inventions. Please note that the photographic reproductions of letters in "Successful Selling of Inventions" express much more than mere interest in new devices -- are not single extracts from unidentified communications, but are authentic, signed letters definitely testifying to actual sales and royalty agreements made between inventors and manufacturers.

The Institute has kept faith from the first with its members; its sales method has been successful -- fidelity and result-getting service have brought about an expansion of the Institute, in some eleven years, from a single room to the entire 8th and mezzanine floors of the same building and from a score of members to a present world-wide enrollment of over 3,500 inventors. During these years the Chartered Sales Plan has won a foremost place for itself in the industrial field and is now widely accepted as the essential procedure in modern invention marketing.

American industry is entering upon an era of distinct promise and manufacturers are asking for new and better devices. Take advantage of these conditions and use the plans of successful inventors. Create competition by having your new idea placed, in a safe, quick, efficient way, before the fifty or more prospects constituting its logical market -- all this as outlined in our booklet and explained in detail in the service items.

Immediately upon receipt of your application with membership fee of $5, our seventeen-item service, as listed on pages 3 and 4 of the booklet, will begin. The earlier you send us your membership application, the earlier we can give you the direct personal service which has proved so helpful to others. Enclosed blank is for your convenience.

Very truly yours,

CHARTERED INSTITUTE OF
AMERICAN INVENTORS

By Charles Beard
Secretary

C

CB/ED
File:N-D/F

Chartered Institute of American Inventors

INCORPORATED UNDER FEDERAL LAWS

BARRISTER BUILDING — 635 F STREET, N. W.
EIGHTH AND MEZZANINE FLOORS

TRUSTEES
CHARLES BEARD
J. H. GRIMES
A. F. LAUFER

OWNED AND MANAGED BY INVENTORS

CABLE ADDRESS "CHARTAMER"

Washington, D.C.

February 13, 1936

Mr. Carl G. Fisher
Miami Beach, Fla.

Dear Mr. Fisher:

Your patent #2,030,350 on a Solar Operated Refrigerating System has been examined with care. If you wish to realize the invention's full value with the least possible delay, it should be submitted to the whole of its logical market at the outset and all possible competition created. The enclosed booklet gives particulars. Meanwhile, to leave yourself free to choose among competitive offers, we suggest that you not accept any early proposals or contracts you may receive.

The Chartered Institute was formed by inventors themselves that they might have a reliable organization with the most efficient facilities possible for handling new ideas. The sales plans followed are based on many years of successful experience in selling inventions--proof of which has been mailed you under separate cover.

A cordial invitation is extended you to apply for membership. You are assured of the genuine and utmost aid of this mutual association of inventors.

Very truly yours,

CHARTERED INSTITUTE OF
AMERICAN INVENTORS

By Charles Beard

Secretary

CB:MER

Copy of this letter sent Mr. Albert T. Bremser

C

Chartered Institute of American Inventors

INCORPORATED UNDER FEDERAL LAWS

8th Floor, Barrister Building

ENTIRE EIGHTH AND MEZZANINE FLOORS

Washington, D.C.

TRUSTEES
CHARLES BEARD
JOS. H. GRIMES
AUG. F. LAUFER

635 F STREET N. W.
CABLE ADDRESS:
"CHARTAMER"

WORLD'S LARGEST
ASSOCIATION
OF INVENTORS
ESTABLISHED 1924

Membership Invitation

The Chartered Institute of American Inventors extends a cordial invitation to you, Mr. Carl G. Fisher

to make application for membership in this educational and cooperative association of inventors of the United States, Canada and other chief countries of the world.

Objectives in Brief:

The association was formed by inventors themselves in 1924 that they might have an organization they could definitely control and rely upon for dependable and efficient service—more particularly in marketing their patents and pending applications on equitable terms; also in safeguarding and realizing the fair worth of their new ideas without the preliminary expense of patenting, especially where economy is essential. The rapid growth and sustained membership of the Chartered Institute is due chiefly to the fact that *its sales plan does successfully market inventions*—a fact we are in position to prove absolutely.

Inventors greatly feel the need also of reliable information upon the great diversity of sales and promotion plans placed before them when their protected inventions are disclosed. This information the Chartered Institute freely gives, but does not take it upon itself to attack or "knock" any individual or organization. Where a warning is given or caution advised, it is against certain ineffective or unduly costly procedures—not against persons.

Successful inventors are today placing their new ideas in a direct, attractive, easily-understood way before *actual invention buyers.* As an Institute member, you will receive, free of charge, full information of these better modern sales methods—no later commission or sales-fee to pay us or anyone else.

Organization and Management:

The Chartered Institute of American Inventors has no capital stock; hence, no stockholders to exact profits. Service to members is rendered at cost. The original organization was incorporated under Federal laws February 13, 1924, as an educational and non-profitmaking association of inventors. Business began with one employee and a single room. Today the Institute occupies the entire eighth and mezzanine floors of the same building with a numerous and highly trained staff which includes men qualified by education and experience to submit successfully both patented and unpatented inventions to their logical market. Membership has correspondingly grown and now extends to sixteen countries. Each member has one vote in the annual meetings at which the trustees are elected. The trustees appoint a secretary, who may or may not be one of their number, and who has direct management of the Institute.

The Institute's present secretary, originally an inventor and patentee, was one of the organizers and charter members. His entire time is now devoted to aiding other inventors in marketing their devices and in giving information, based upon personal experience, concerning patent and sales questions. Such aid and experience, and the experience of numerous other inventors, will be freely yours as a member of the Chartered Institute.

Membership Requirements and Privileges:

Applicants for membership may be citizens of any country, but must be reputable inventors, or bona fide owners or part owners of inventions, either patented or unpatented. Each accepted member will receive the full service described in this booklet. At the end of his first year, he may exercise the option of becoming a life member, but without paying any further fee or dues, until one of his inventions may be satisfactorily marketed as a result of assistance rendered by the Chartered Institute. He would then pay only the small regular membership fee for the year in which the invention was sold or placed on royalty; if two or more inventions are marketed, then fees for two or more years, etc. In other years, the inventor-member would pay nothing beyond enclosing us return postage for any letters we would write him in response to *his inquiries* for information, etc. On any extra service he might require, such as additional lists of manufacturers, valuations, searches, etc., he would receive members' reduced prices. He would be under no obligation to continue his membership longer than desired—could withdraw simply by mailing us written notice to that effect. In brief, our invitation is that you join the Chartered Institute for one year, after which you would pay only postage on our replies to your letters, until such time as one or more of your inventions are sold as a result of our service. At all times you would have

full liberty of action as to continuing in this fraternity of commercial inventors.

As a member of the Chartered Institute, you will be supplied, promptly upon acceptance of your application, with all the following substantial service items—an aggregate of constructive help never before equalled by any other association of inventors.

Seventeen Service Items:

(1) List "A" comprising names, addresses and manufacturing lines of the 1,000 principal patent buyers of the United States, taken chiefly from Patent Office records of assignments of inventions—thoroughly revised and up to date.

(2) List "B" of fifty (50) manufacturers and patent buyers most likely to be interested in your particular device, specially selected for your individual invention from our classified records.

(3) Copy of four styles of letters adapted for use in approaching prospective buyers of (1) patents, (2) pending applications and (3) inventions not yet filed upon.

(4) Forms of contract: (1) Outright sale of inventions; (2) Royalty leases—so drawn as to guard against "shelving" your invention and providing a guaranteed yearly minimum, with royalty payable quarterly.

(5) Conservative commercial valuation of your invention on outright sale; also estimated earnings on royalty basis.

(6) Form "Proof of Invention" devised to afford the fullest legal protection to inventors while approaching manufacturers with unpatented ideas. We will certify and file confidentially, free of charge, proofs of as many inventions as you wish to send.

(7) Folder, "Institute Sales Plan," giving detailed information of the most effective, up-to-date, result-getting means for realizing on patents and pending applications.

(8) Folder, "Chartered Sales Plan," explaining clearly how inventions not yet filed upon in the Patent Office may be first, safeguarded; then successfully submitted in a businesslike way to prospective buyers without the slightest danger of unauthorized appropriation.

(9) Two Facsimiles showing how new ideas are to be placed before prospects: (1) when U. S. patents and pending applications are to be sold or leased under royalty, and (2) when inventions not yet filed upon in the Patent Office are to be protected and marketed, with rights to apply later for foreign (as well as U. S.) patents adequately safeguarded.

(10) Folder, "Legal Steps in the Transfer of Unpatented Inventions," detailing an up-to-date contract procedure designed to ensure that the inventor will realize safely from manufacturers the agreed outright-sale price or stipulated royalty.

(11) Folder, "Sales and Advertising Schemes," in which the "catch" or "joker" is pointed out in many of the selling and promotion proposals put before the inventor the moment his new patent issues.

(12) Folder, "Pertinent Information for Inventors," answers many questions of vital interest to inventors. List is given of inventions marketed in recent months thus indicating the kind of devices now in greatest demand.

(13) Folder, "Five Hundred Wanted Inventions," with suggestions as to how each invention may be devised or improved to meet manufacturers' present requirements.

(14) Folder, "Stronger Patents at Reasonable Cost," gives information to inventors wanting to obtain, at a moderate expense, the strongest possible patent protection on their new ideas.

(15) Folder, "Copyright Protection for Inventions," explains how this very inexpensive Federal registration may be made to safeguard descriptions and drawings of new ideas.

(16) Experienced advice on the more important problems and questions as they arise in your work as an inventor and marketer of new ideas. Such advice is not a circular of generalities, but specific information individually given you by letter upon request, as you may require from time to time.

(17) A Washington Office to represent you at the center of patent interests in the United States.

The first fifteen items will be supplied you immediately upon acceptance of your membership application. Service (16) will be rendered you upon request. You are not limited to advice and help with one invention during your year of membership. You may bring forward as many of your new ideas as you wish. You will have at all times our best cooperation in behalf of each invention.

The plan of selling indicated by the foregoing outline may be carried through wholly by the inventor himself, if he prefers. Where he does not have time to spare, we will act for him, as explained in the Institute and Chartered Sales Plan—service items (7) and (8).

Realizing on Inventions:

For the inventor to form a corporation to manufacture and market his new device, is now a hazardous undertaking—too many firmly-established, amply-financed manufacturers. Enterprising concerns, however, were never more eager than now to buy sound, profit-making inventions to meet the keen competition of today, and the inventor will do well to place his proposition promptly before a substantial number of reliable manufacturers. *Members of the Chartered Institute will have the benefit, without extra*

charge, of our special study and survey of their particular inventions and detailed suggestions as to the steps to take to realize the full worth of their inventions. This service will be rendered within one week after the inventor becomes a member.

Some of the "sales ammunition" which the Chartered Institute supplies free to its members will now be described in detail.

List A:

This is a copyrighted list of names, addresses and business lines of over 1,000 of the principal invention buyers of the United States, specially compiled from Patent Office records of assignments and other sources and thoroughly revised to date—a revision costing some hundreds of dollars. Many of these buyers have purchased a dozen or more inventions—some of them hundreds—for a number of years. List is free to members; to non-members, $2.

List B:

This is a list of fifty manufacturers and prospective invention-buyers specially compiled by us for each inventor's particular invention. Week by week we bring into our office records every buyer of inventions reported in the "Official Gazette of the U. S. Patent Office." These records are supplemented by systematic compilations of names of manufacturers reported in trade and other magazines as being now interested in new lines of production. We are thus equipped to make up accurately a list of manufacturers, etc., most likely to be interested in any particular invention. These lists ordinarily comprise only manufacturers in the United States, but, *when requested at the time,* a proportion of Canadian manufacturers will be included. List can not be made to cover two inventions, unless closely similar and appealing to the same class of prospects. Each member is entitled to one list of fifty manufacturers for each year of paid membership. Extra lists of 50 names, $3 to members; $4 to non-members; 100 names (for one invention selected at one time), $5 to members; $6.50 to non-members.

We can also supply lists of manufacturers in the different industrial countries of the world. Lists of 25 foreign names and addresses are made up for members at $3; for non-members, $4; 50 names, $5 to members; $6.50 to non-members. Twenty-five-name list may not cover more than three countries; 50-name list not over six countries.

Letter Forms:

The Chartered Institute supplies four styles of form letters which experience has shown as most effective in approaching prospective buyers of patents, pending applications and inventions not yet filed upon in the Patent Office. Free to members; to others, $1 for the four forms.

Outright Sale and Royalty Contracts:

A faultily drawn outright-sale contract, or a royalty agreement, may tie up your invention without your ever receiving a dollar therefrom. It is a "safety first" precaution to follow the Chartered Institute's forms for outright sales and royalty licenses, as recently revised. Free to members; to non-members, $2.50.

Valuations of Inventions:

An invention is a very difficult property item to value satisfactorily. A new idea can not be said to have intrinsic value, as does real estate, merchandise or other tangible commodity. Its worth is just what can be realized from it. All we can helpfully do is to make an appraisal based upon what somewhat similar devices have been sold for, or have earned under royalty contracts. Such an estimate will be helpful, but must never be taken as a guaranty of the invention's value.

One free valuation is made for each year of paid membership. This will be based on the same invention for which you ask List B, unless you otherwise request. Additional valuation, $3; to non-members, $4.

Sales Plans:

The service items and "sales ammunition" just outlined and supplied free to inventor-members, will enable them, with a little time and care to details, to carry through their own sales campaigns along sound up-to-date lines. The Institute recognizes, however, that many inventors not only have little time to give to sales undertakings, but feel disinclined toward such effort. For this reason we have developed the "Institute Sales Plan" (item 7), by which inventors can handle their own patents and pending applications in the most efficient way, yet give, if need be, no more than a single hour per week to sales details. In the case of new ideas not yet filed upon, similar efficiency, with full safety, is afforded under the "Chartered Sales Plan" (item 8). *Where the inventor prefers to give no time whatever to his sales campaign, we will arrange to look after correspondence and negotiations for him.* Particulars of these modern and effective marketing methods can only be furnished actual members of the Institute.

Safeguarding and Selling New Ideas:

Some years ago the inventor ordinarily waited for his patent to issue before trying to sell. In recent years more inventions have been transferred to manufacturers before patent issued than afterwards. Today a steadily increasing number of inventors are testing out the commercial value of their new ideas before incurring the expense of patent applications. *The Chartered Institute has perfected a plan by which the inventor may now legally and effectively safeguard his new ideas, while approaching prospective buyers—a copyrighted plan. Service items (6) and (8), page 3, give details of the plan, which is original with the Chartered Institute of American Inventors, and marks probably the most important advance ever made in marketing new ideas safely and efficiently in advance of applying for patent.* Summarizing the Chartered procedure very briefly, the priority rights to a new and promising idea are first protected by an adequate proof of invention; then the invention is "reduced to practice," either actually or constructively. The "Chartered Sales Plan" explains how "reduction to practice" may be legally accomplished in three ways—one of them quite inexpensive. This done, the invention is promptly placed before manufacturers. Delay or concealment may result in forfeiture of rights. It is now entirely practicable to safeguard a new idea of merit before patenting—a procedure based on Federal court decisions cited in Chartered Plan—and to market it successfully. Progressive inventors are now following this procedure and testing out the commercial value of their devices before making patent expenditures. Once a manufacturer is really interested, he will usually be willing to pay for thorough patent protection and deduct the cost from price paid inventor.

Copyright Protection:

Copyright registration affords the inventor quick protection against any unauthorized person imitating the drawings or description of his new idea. Registration may ordinarily be obtained in a week or ten days and the inventor may then immediately proceed against an infringer. Penalties imposed under the Federal laws are severe. Full details are given in our folder, "Copyright Protection for Inventions." Cost of registration is $4.50 to members; $7.50 to non-members.

Searches, Drawings, Patents, Trade-Marks, etc.:

The Chartered Institute does not apply for patents, or render any service in competition with registered patent attorneys in their particular field of *preparing and prosecuting patent applications,* but does make searches of Patent Office records to determine novelty and patentability of inventions. This work is carefully done by thoroughly qualified specialists—none with less than ten years' active experience. Fee is $5 to members; $10 to non-members. Drawings are prepared for members at $5 per sheet; $3.50 for half sheet.

Where an inventor is already receiving satisfactory patent service from a reliable, registered patent attorney, he would do well to continue his connection. If, however, he is dissatisfied and wishes us to place him in touch with a patent lawyer of proven competency and reliability, and whose fees will be reasonable, we are agreeable to do so. The attorney selected would preferably be one specializing

in the particular line of the new device to be protected. Substantially the same suggestion would be made with regard to trademark registrations, should you wish service of that character.

Membership Certificate:

An attractive Certificate of Membership, 8½" x 10¾", under the seal of the Chartered Institute, will be issued you as a member and you will be entitled to place on your letterheads, cards, etc., "Member Chartered Institute of American Inventors," or "Member C. I. A. I." Such membership will serve as notice to all you do business with that you are not standing alone, but have the counsel and support of the leading association of commercial inventors in the world.

Sales and Advertising Schemes:

From the time an inventor's new device is disclosed, or his patent issues, he is besieged with alluring schemes, many of them so cleverly masked as to completely conceal the ulterior objective and deceive the shrewdest of inventors. For example, an agent brings forward, with a studied show of good faith, a "fair and square" contract, apparently to sell the invention for, say, $75,000, whereas the inventor himself had valued it at but $7,500! Not a penny is asked in advance and the commission is low. Every contract safeguard is conspicuously thrown around the patentee—few apparently around the agent! Yet, with hardly an exception, there is a cunningly concealed scheme that is likely later to cost the inventor dearly.

For each inventor to test out for himself the multiplicity of sales and advertising schemes would cost hundreds, even thousands, of dollars and months of time. Obviously, then, the logical course is for inventors to organize, pool their experiences and hand on accumulated information to new members of the association. The Chartered Institute is the outgrowth of this and other requirements of inventors today.

Of the many cunning snares laid for the inventor, probably the offer to handle his device on "straight commission" is the most deceptive—an offer made merely to gain the inventor's confidence, so the agent may sell him a "patent report" or something of that nature. Genuine "commission only" has thus far proved unworkable. Among reasons, one is that no single agent can make sure of exclusive agency, unless the invention is assigned to him, or to a trustee—something that would not appeal to the owner of a good invention. Without exclusive agency, a dozen agents could only spend their time and money with the certainty that at least eleven of them would make a total loss. We have yet, therefore, to find an agent making any real effort, or investing actual cash, purely on commission. If an agent could be found with business genius enough to succeed under the handicap just mentioned, his services might be worth much to our members; so we have a standing offer to pay $250 for the name and address of any agent who has, for as long as six months, rendered a successful sales service, on a reasonable commission, say 5%, to any substantial number of inventors.

Typical of the class of schemes just referred to, an agent offers to sell an invention purely on commission—no advance fee. He encloses a contract overflowing with pleasing safeguards for the inventor—this to divert attention from his own failure to promise any verifiable sales effort. If the inventor signs, the agent's next step is to rush a special delivery letter to him, emphasizing the urgency of an engineer's report, patent review, or some fancifully named document, ostensibly to convince manufacturers of the patent's soundness—fee $10 to $25. If the inventor does not "come across,"

price will be cut to half or less. Whether the inventor forwards $25 or less, he will get some material fulfilling legally all the agent's claims. It will "look well" but will not be worth a dime for selling a patent to modern executives. All information the latter require will be obtained solely from sources they already know and trust, i. e., their own engineers, sales managers, etc.

Many of the patent expositions, so-called inventors' congresses, model and drawing displays, etc., are now nothing more than lucrative rackets. Some of the promoters pose as the national or official representatives of inventors generally, but their chief objective is clearly the profit derived from subletting display space. All such schemes would signally fail, if the way to them had not been paved by the present favorable reputation of automobile shows, machinery exhibits, etc. Unfortunately, the fact is frequently overlooked that the sales made at the latter *are never of patents but solely of individual cars, machinery, etc.* As for selling the rights to inventions, hardly any plan could be more futile. Ordinarily, not one executive in position to buy patents will be found among the type of entertainment seekers who attend such shows. Some of the people who inspect models might buy a single device, but patent rights—never. Even if an appreciable number of actual patent buyers were ever present, the bustle and distraction of any exposition is too greatly against consideration of the kind which alone could result in sales. A patent to find a purchaser in these days of critical scrutiny of all inventions must be brought directly to the attention of executives at their business headquarters, where their engineers, sales managers, etc., may be consulted. No manufacturer now purchases the rights to any invention until it has been thoroughly examined and approved by his own technical staff. *We have yet to learn of a single invention actually disposed of at such expositions, congresses, etc. Money so spent is absolutely thrown away. Probably American inventors have been thus mulcted out of a quarter million dollars in the last five years.*

With a view to giving inventors first-hand evidence of the facts, we obtained the names of over 100 inventors who had exhibited their models or drawings within the last year. As a result of letters written them, we failed to find a single inventor who had either sold his invention, or had obtained any kind of an offer from a manufacturer or other bona fide prospect. The average experience was much as one inventor expressed it: "Plenty of people out to see the show, but the wrong kind—apparently just curiosity seekers. Not one of them showed the least interest in my patent rights, but a good many thought my machine interesting. What I ought to have had was a 'hot dog stand.' I might at least have made expenses, instead of spending over $70 for exhibit space, hotel bill, railroad fare, etc., and having nothing to show for it."

An agent advertises for unpatented inventions, recommends a search of patent records at a profit-making fee; then urges the preparation of an expensive patent application—this is to be held unfiled until the agent interests a purchaser, when the application is to be filed posthaste in the Patent Office. Almost never do such agents create real interest or make a sale. The scheme would wholly collapse, if it were generally understood that nothing could possibly be gained through saving a few days' time in filing a patent application. That inventor who first conceives and perfects a new idea will alone become the final patent owner—not the person who may have filed first in the Patent Office. How the inventor can definitely safeguard his unpatented invention until he tests out its salability at a minimum of cost is fully explained in our folder, the "Chartered Sales Plan."

Lack of space prevents our referring to a considerable number of other objectionable procedures, but full particulars will be found in the folder, "Sales and Advertising Schemes"—see page 4, item (11).

Information to Inventor-Members:

As an Institute member you will be entitled to advice without charge in regard to all matters of interest to you as an inventor, except where special research is required, such as searches of Patent Office records, etc. Possible inquiries cover too wide a range to be separately enumerated, but the following are representative of questions answered upon request:

How may an invention, upon which patent application has not been filed, be best protected while its commercial value is being tested out by submitting to manufacturers? Under what circumstances will an error in an issued patent be corrected? Conditions under which a patent may be reissued? What are the respective rights of employer and employee to an invention made by the latter? What kinds of inventions are now selling most readily? How long has an American inventor for filing in Convention and foreign countries generally? How may an inventor change his attorney of record now in charge of a pending application? When are models required by Patent Office? Is a model essential in marketing a patent? How may priority of invention be best established? What constitutes infringement?

Advice, etc., as indicated above, is free to members. Non-members will be charged $1.00 for each separate inquiry answered.

Membership Dues:

Membership dues are $5 for twelve months, beginning on date of acceptance of membership application. This amount is payable at the time of application. Credit or commission terms can not be arranged, as the Institute is a non-profitmaking association of inventors. *There are no initiation fees, no assessments, no liabilities, no obligations of any kind.* We charge you neither fee nor commission on any sale made of your invention.

Usually the "Membership Application Form" on page 11 will be found adequate by inventors. In case, however, you prefer a special contract with us in advance of forwarding the membership fee, we shall be glad to send you such contract upon request.

We extend you a cordial invitation to apply for membership, both in your own direct interest and in the interest of that wide fraternity of inventors to whom the world owes all important industrial progress.

Chartered Institute of American Inventors

Charles Beard, *Secretary*

"World's Largest Association of Inventors" **Established 1924**

Cut or tear off on this line

Membership Application Form

1936 Edition

Chartered Institute of American Inventors
8th Floor, Barrister Building
Washington, D. C.

Instead of this Form you may, if preferred, write on a separate sheet the Short Application Form suggested at the bottom of this page, or other form of your own.

I hereby make application for one year's membership in the Chartered Institute of American Inventors under the conditions described in the booklet, Membership Invitation, sent me. It is understood that I incur no obligation or expense whatsoever beyond the membership dues of $5 for twelve months, which I now enclose.

Promptly upon acceptance of this Membership Application, you are to send me the first fifteen service items listed on pages 3 and 4 of said booklet and render me the full service described therein.

*Date*_____, *193*____

Name _____

Address _____

_____

*Title or nature of invention (patented or unpatented) for which List B is to be prepared*_____

_____

_____

*If above invention is patented, state patent No.*_____

*If not patented, has patent been applied for?*_____

*Give numbers (if convenient) of any other patents that may have been issued to you*_____

Special Notice: List B not to cover two different inventions. If Canadian manufacturers are to be included, please state on back of this page the number of Canadian names desired; otherwise only U. S. names will be included.

Short Application Form: "I apply for membership in the Chartered Institute of American Inventors and enclose $5 dues. Prepare List B for my patent (No. of Patent) or for my unpatented invention (title of invention)."

Chartered Institute of American Inventors

Our records of manufacturers are very complete and are kept thoroughly up-to-date, but in specially compiling your List B, it would be helpful if you would add to our knowledge of your invention any information you can conveniently give below, such as:

(1) Different uses of your invention: .....

.....

.....

.....

.....

(2) Classes of manufacturers you think would be most interested:

.....

.....

.....

.....

(3) Remarks: .....

.....

.....

.....

.....

.....

.....

.....

.....

.....

.....

.....

.....

"World's Largest Association of Inventors" Established 1924

February 14, 1936.

Mr. Frank J. Horuff,
Rural Route #1,
New Augusta, Indiana.

Dear Mr. Horuff:-

I have your letter of the 8th.

I am terribly sorry to learn about Harry Buschman being ill, but I believe his constitution will pull him through. He is as strong as a horse.

Bob has been here for several days and we have had a good many conversations regarding this sign business. The possibilities seem to improve.

Tom Milton has been ill and also terribly over-worked, but the President of the Corporation and the Chief Engineer, and Tom Milton will probably be here within the next ten days. This is one Company that I wanted to sell a large number of signs to.

I would certainly like to have some information about your patents, and I would like to see samples of the work that Bob has described to me, and I would like to look, face to face, at the people who have the business we are talking about.

There are enough prospects to put in a few days on the job.

Our Flamingo sign will be up and operating within the next three or four days.

Yours,

CGF:AVM

CARL G. FISHER.

CECIL CRABB
PRESIDENT

F. D. STALEY
SECRETARY-TREASURER

SIGNS AND OUTDOOR ADVERTISING
515 NORTH LIBERTY STREET
INDIANAPOLIS

February 17th, 1936.

Carl G. Fisher Corporation,
Miami Beach, Florida.

Attention: Mr. R. H. Tyndall.

Dear Mr. Tyndall:-

Thanks for your letter of February 10th.

We are interested to see the new display which Mr. Fisher has in mind and we note that you recommend our driving down with some samples. For the past week the roads have been almost impassible from Indianapolis to the State Line in any direction. The Motor Club, the newspapers, and radio have advised everyone who does not absolutely have to travel to stay off the highways. State Police have been stationed at the city limits advising motorists to turn back. This condition of course will last only a few days. We had another considerable snow during the night and zero is predicted for tonight, therefore, it is all but impossible to drive down before the end of the week.

We will get in touch with you by telegram for a definite appointment when the roads are clear enough to be used. In the meantime we sincerely hope that your interest survives. We realize that it would be much better to be there while some of your contacts are still guests of Miami Beach and we will watch the road conditions daily until you hear from us.

Yours very truly,

STALEY & CRABB, Inc.

By F. D. Staley
SEC'Y. - TREAS.

FDS/m

1201-S

AN ANSWER IS EXPECTED BY THE SENDER OF THIS MESSAGE. PLEASE GIVE IT TO THE MESSENGER OR TELEPHONE IT TO WESTERN UNION

WESTERN UNION

(06)

SIGNS
DL = Day Letter
NM = Night Message
NL = Night Letter
LC = Deferred Cable
NLT = Cable Night Letter
Ship Radiogram

...the date line on full-rate telegrams and day letters, and the time of receipt at destination as shown on ... is STANDARD TIME.

1956 FEB 20 PM 6 07

Received at

MZAG447 15/19=VIA MA VIA LR=INDIANAPOLIS IND 20 334P

ROBERT H TYNDALL=

5812 ALTON RD=

CAN YOU AND MRS FISHER SEE ME MONDAY STOP IF SOWILL LEAVE FRIDAY

MORNING WIRE ANSWER BY WESTERNUNION=

F D STALEY.

MINUTES IN TRANSIT	
FULL-RATE	DAY LETTER

February 21, 1938.

Mr. F. D. Staley,
Staley & Crabb, Inc.,
515 North Liberty Street,
Indianapolis, Indiana.

My dear Staley:-

After thinking over the matter and talking with Mr. Fisher, I believe it would be just as well to defer a meeting and save you a trip over the bad roads at this time.

The whole thing may be taken up when Mr. Fisher comes North, and I will talk to you about it on my return.

Sorry I did not receive your wire in time to save you a telephone call last night, but I had just gotten in the house and received your wire when you telephoned.

Sincerely,

RHT:AVM